7 6 5 4 3

DO NOT SCALE DWG

337 SWITCH LEVER

±.001

78-0274 INDEXING CYL.

.000 +.000 -.015

0279 NUT

78-0327 PIN
.040. USE
8081 TO
GHT

EELER
084

-1-66-5353
CLINCH NUT

66-5793
PRING

06-5389
RING

EVER

5761
W

MOUNTING ASSEMBLY
78-0760
S.H.C.S. 1/4-20-1
1-01-1035
WASHER LOCK
1-65-1943

SWITCH ASSEMBLY
78-0290 (1)

S.H.C.S. .3125-18-1.250 (12)
1-01-1056
WASHER LOCK (12)
1-98-1443
WASHER FLAT (12)
1-42-1984

SHCS 1-01-1016 (2)
LOCK WASHER (2)
1-63-1925

REF: 78-0420
PIVOT PLATE
ASS'Y.

SWITCH F

SNAP RING
1-66-5293 (2)
THRUST WASHER
1-66-5294 (2)

78-0363
BRZ. BUSH. (REF.)

65-2526 CABLE CLAMP
01-1016 SHCS

PLATE & DIAPHRAM ASS'Y.
78-0324
1-01-1016 (4)
1-63-1925 (4)

COVER TOP ASS
78-0328

66-5192 2 REQ'D REF.

CYLINDER AIR
1-66-5334 (1)

LOCK ASSEMBLY 78-0310

78-0506 FITTING
78-0505 (.020 ORIFICE)
NOTE: ONE ORIFICE THIS
POSITION ONLY

SPRING
1-78-0316

ROD END
78-0025
JAM NUT
1-01-1711
BHCS 1-66-5559
HEX NUT 1-01-1743

FLAT WASHER ¼ SAE
1-11-1912 (1)
SNAP RING 5100-25
1-18-0818 (1)

SEAT
66-52
SPR
66-5

TOLE
OTH
2 PLACE
3 PLACE
4 PLACE
ANGL

6 5 4

DO NOT SCALE DWG

REV. #	ZONE	ECN NO	REVISION	DAT
7	C04 K04	5081	[illegible]	[illegible]
2	C4.04	5196	.018 - .022 GAP WAS .005 78-0884 WAS 78-0772	[illegible]
3	D5	5442	.020 ±.002 T.I.R WAS .018±.020	4 DEC 81

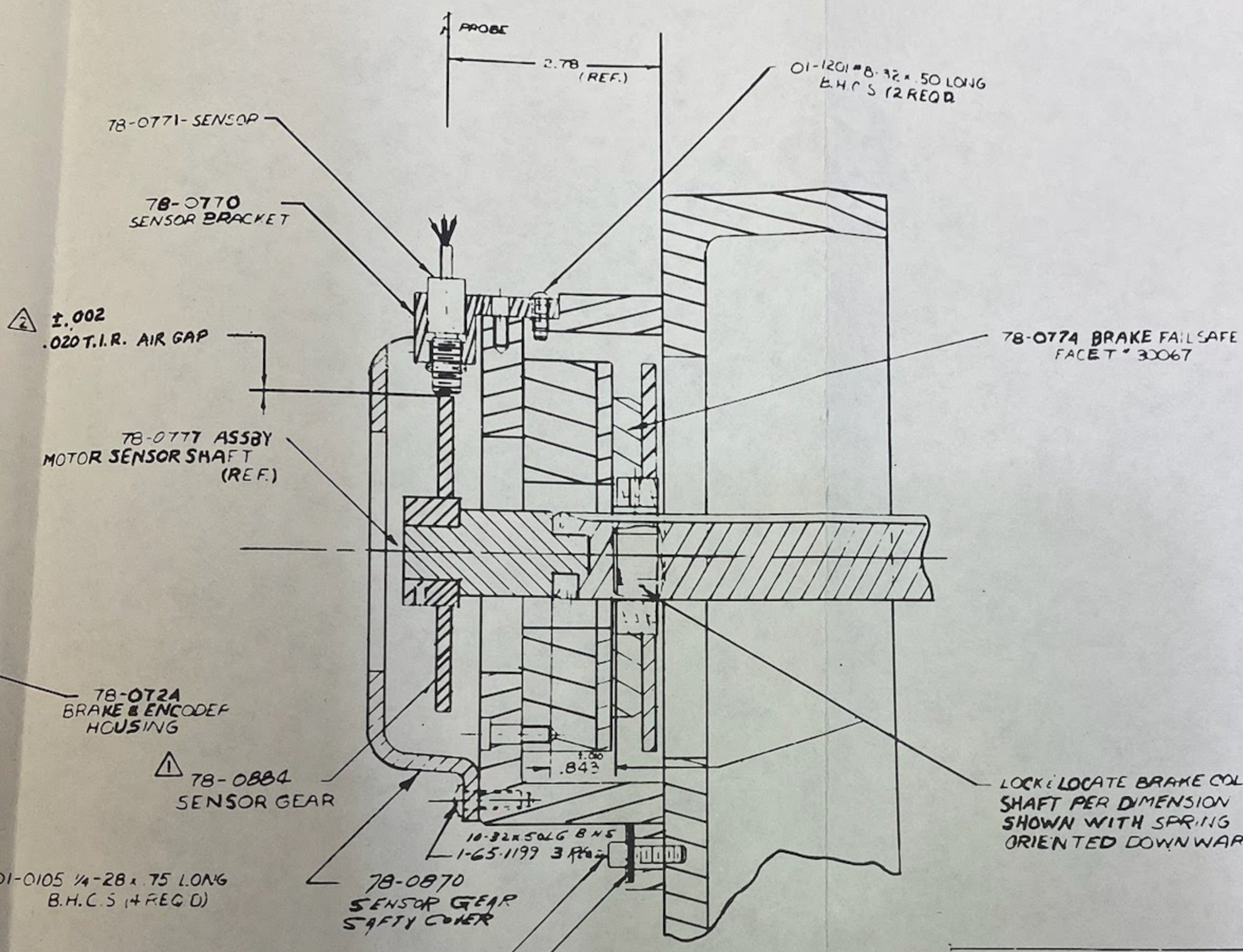

MARKED PRINT

1 REWORKED GEAR FROM 78 0772

2 LARGER AIR GAP

TOLERANCE UNLESS OTHERWISE NOTED	MAT'L		PATT. NO.
2 PLACE DEC = .015	H.T.		
3 PLACE DEC = .005	FINISH		
4 PLACE DEC = .0005	DRN. LEONETTI	DATE 1-2-81	THIRD ANGLE PROJECTION
ANGLES = 1°	CK'D PLATE	DATE 3-5-81	

Bridgeport TEXTRON
Bridgeport Machines Division of Textron Inc.

TITLE: SENSOR & BRAKE ASSEMBLY SERIBTC LOW PROFILE

SCALE FULL | SHEET 1 OF 1

DWG NO. 1278-0776 | REV. 3

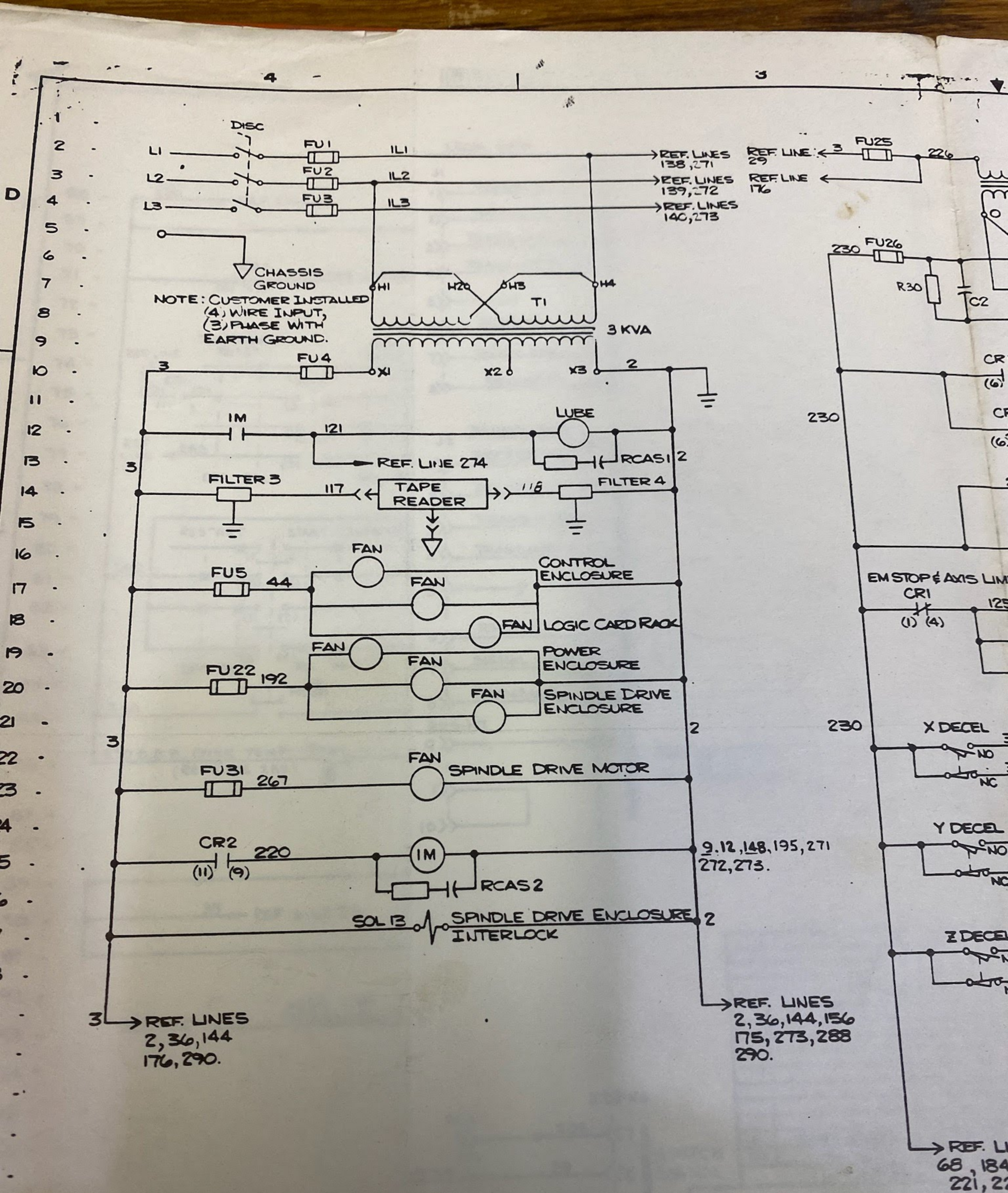

WIRE NUMBERS

1L1, 1L2, 1L3, 2, 3, 44, 115 THRU 117, 121, 125 THRU 127, 226 THRU 228, 230, 254 THRU 256,

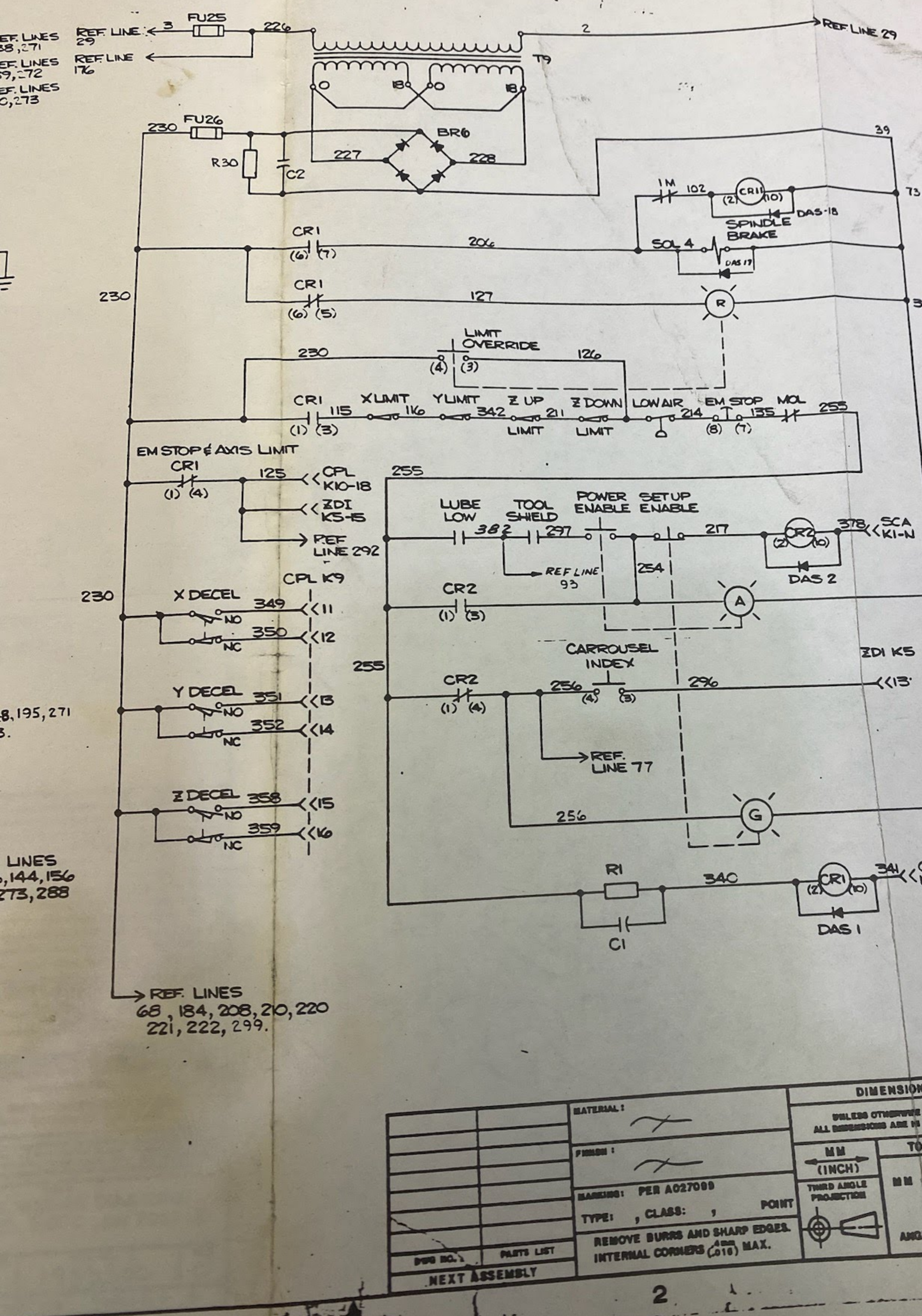

FUSE NUMBER	DESCRIPTION			BRIDGE P/N
1,2,3	FRS	20A	600V	150877
1,2,3	FRS	12A	600V	150995
1,2,3	FRS	10A	600V	150877
4	MDA	7A	250V	150877
5	MDX	1 1/2A	250V	150695
6	MDL	1/2A	250V	150195
7	MDX	3A	125V	150477
8,9,10	MDA	20A	250V	150877
11,12	MDL	1A	250V	150395
18	AGC	1 1/2A	250V	150695
19	AGC	3A	250V	150477
20	BAN	20A	250V	150877
21	MDX	3A	125V	150477
22	MDX	1 1/2A	250V	150695
23	MDA	3 2/10A	250V	150877
24	MDA	3A	250V	150877
25	MDL	2A	125V	150295
26	MDX	5A	125V	150577
27	MDL	1/2A	250V	150195
28,29,30	ABC	20A	250V	150877
31	MDL	1/2A	250V	150195
32	MDL	1/10A	250V	150095
33	KTK	6A	600V	150877

OVERLOAD HEATERS CLARK P/N	BRIDGE P/N
2445	150391
2444	150388
2438	150385
2437	150368
2436	150992

DWG NO.	PARTS LIST	MATERIAL: ~	DIMENSIONING: UNLESS OTHERWISE SPECIFIED ALL DIMENSIONS ARE IN MILLIMETERS
NEXT ASSEMBLY		FINISH: ~	MM (INCH)
		MARKING: PER A027099 TYPE: , CLASS: , POINT	THIRD ANGLE PROJECTION
		REMOVE BURRS AND SHARP EDGES. INTERNAL CORNERS (.010) MAX.	TOLERANCES: MM .X = ± ( ) ANGLE .X = ± .5°

DESIGNED:	DATE:		
DRAWN: J. H. SEYBOLD	DATE: 8-25-04		
CHECKED:	DATE:		
APPROVED:	DATE: 6-24-91		
PROJECT NO. 846	MODEL NO. BTC		

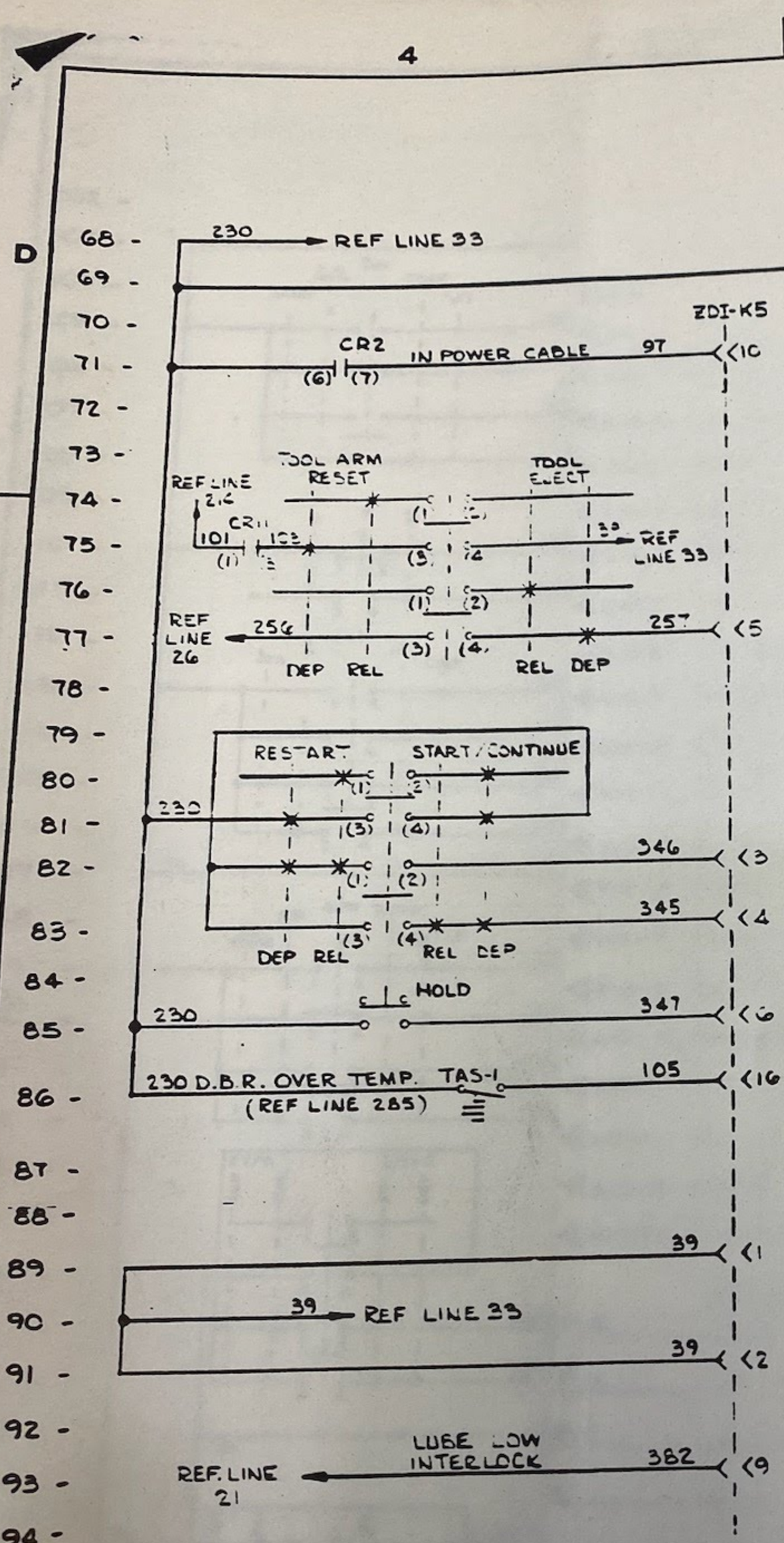

WIRE NUMBERS

39, 43, 76, 97, 99, 101, 103, 105 THRU 110, 142, 143, 147, 149, 150, 203, 230, 253, 256, 257, 265, 294, 295, 345, 346, 347, 382

INDEX TABLE

J14 SYSTEM INHIBIT J14 ZDI-K5

230 (C) INDEX COMPLETE (D) 294 <7

230 (A) (B) 295 <8

ZDI-K5

97 <10

REF. LINE 189 — 265 — SOL 14 — 253 — CR9 (3) (1) — 39 — REF. LINE 33

DAS-19

ZDI-K6

230 — (2) CR9 (7) — 99 — <9

DAS-15

(2) CR10 (7) — 110 — <2

DAS-16

MISCELLANEOUS FUNCTION (M53/M54)

J12

CR10 (4) — 108 — <A

(3) — 109 — <B

CR10 (5) — 107 — <C

(6) — 106 — <D

<3 <4 <6 <16 <1 2

ZDI-K7

OP STOP — 142 — <6

BLOCK DELETE — 143 — <7

LOAD — 147 — <3

SPRING RETURN TO CENTER

149 — <1

RESET CLEAR — 150 — <4

SPRING RETURN TO CENTER

MM BOARD K1 ZDI BOARD

13 | A,B

K3

76

41,43 | Y,Z

REF. LINE 61

THRU 110,
230
45.

TAPE READER

ZDI-K9 J3

TR DO1 1 — 1
TR DO2 2 — 2
TR DO3 3 — 3
TR DO4 4 — 4
TR DO5 5 — 5
TR DO6 6 — 6
TR DO7 7 — 7
TR DO8 8 — 8
TR DRDY 9 — 9
10 — 10
11 — 11
12 — 12
TRFWDX 16 — 16
TRRWX 17 — 17
18 — 18

LOCAL DA

J1

1 RECE
2 RECE
3 TRAN
4 TRAN
5
6 RE
7 SIG
8

J2

1 R
2
3
4
5
6
7
8
RR
9
1
10

REF

		MATERIAL:	UNLE ALL DIME
		FINISH:	MM (INCH
		MARKING: PER A027099	THIRD AN PROJECT
		TYPE: , CLASS: , POINT	
DWG NO.	PARTS LIST	REMOVE BURRS AND SHARP EDGES. INTERNAL CORNERS (.016) MAX.	
NEXT ASSEMBLY			

TAPE READER

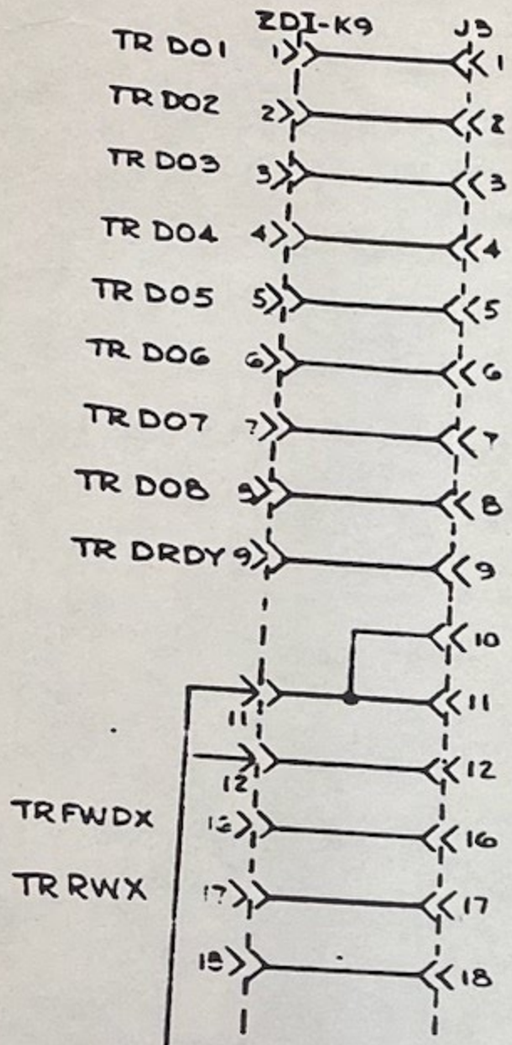

LOCAL DATA

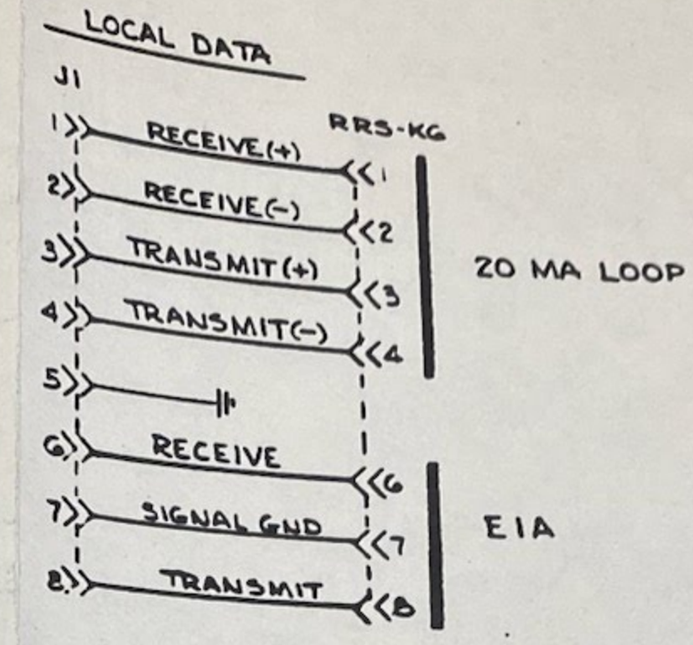

REMOTE DATA

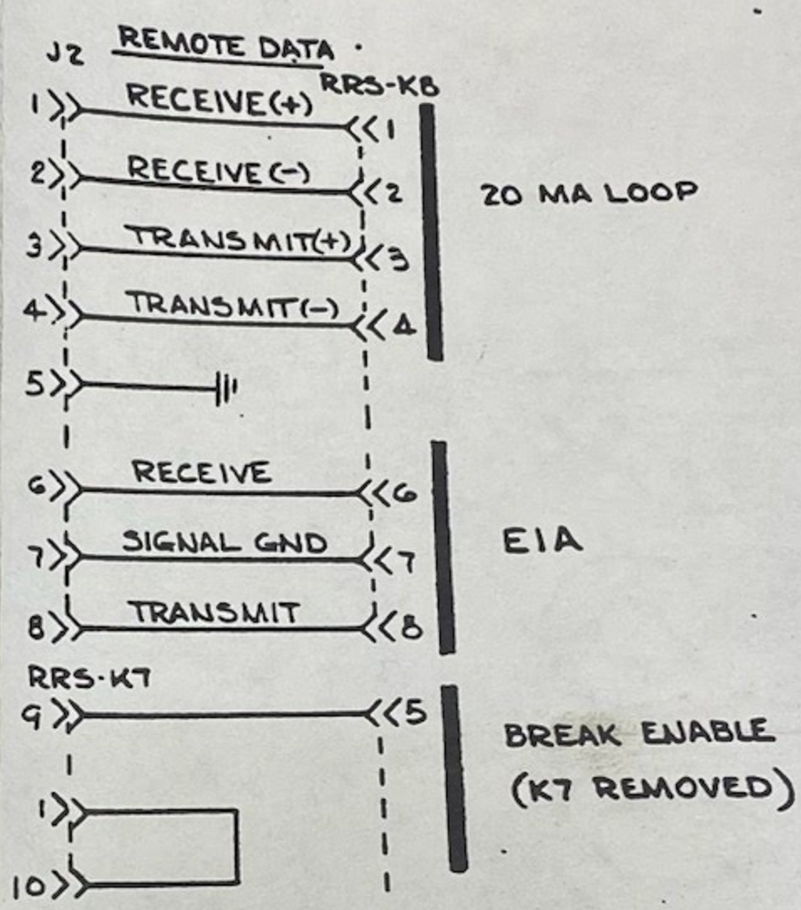

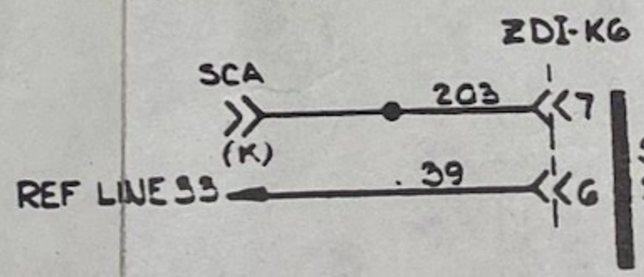

LTR	REVISION	DCN NO.	CHK'D	APP'D	DATE
0	INITIAL RELEASE				6-24-81

Bridgeport TEXTRON
Bridgeport Machines Division of Textron Inc.
CONTROLS MANUFACTURING PLANT
200 Precision Road, Horsham, Pa. 19044

THIS DRAWING/COMPUTER PROGRAM INFORMATION WHICH IS PROPRIETARY TO BRIDGEPORT MACHINES AND IS MADE AVAILABLE TO YOU FOR THE USE AND MAINTENANCE OF OUR PRODUCTS. ANY USE, REPRODUCTION, OR DISSEMINATION OF THIS INFORMATION FOR ANY OTHER PURPOSE IS PROHIBITED WITHOUT WRITTEN PERMISSION.

TITLE
SYSTEM WIRING DIAGRAM
SERIES I-BTC LOW PROFILE

SIZE	CODE IDENT NO.	DWG NO.	REV.
D		1933506	0

SCALE : DO NOT SCALE DWG — SHEET 3 OF 8

DESIGNED : — DATE :
DRAWN : SEYBOLD — DATE : 6-24-81
CHECKED : — DATE :
APPROVED : — DATE : 6-24-81

PROJECT NO. 846 — MODEL NO. BTC

DIMENSIONING
UNLESS OTHERWISE SPECIFIED ALL DIMENSIONS ARE IN MILLIMETERS
MM (INCH)
THIRD ANGLE PROJECTION
TOLERANCES
MM .X = ± ( )
ANGLE X = ± .5°

MATERIAL :
FINISH :
MARKING: PER A027089
TYPE: , CLASS: , POINT
REMOVE BURRS AND SHARP EDGES. INTERNAL CORNERS (.018) MAX.

PARTS LIST
ASSEMBLY

D C B A

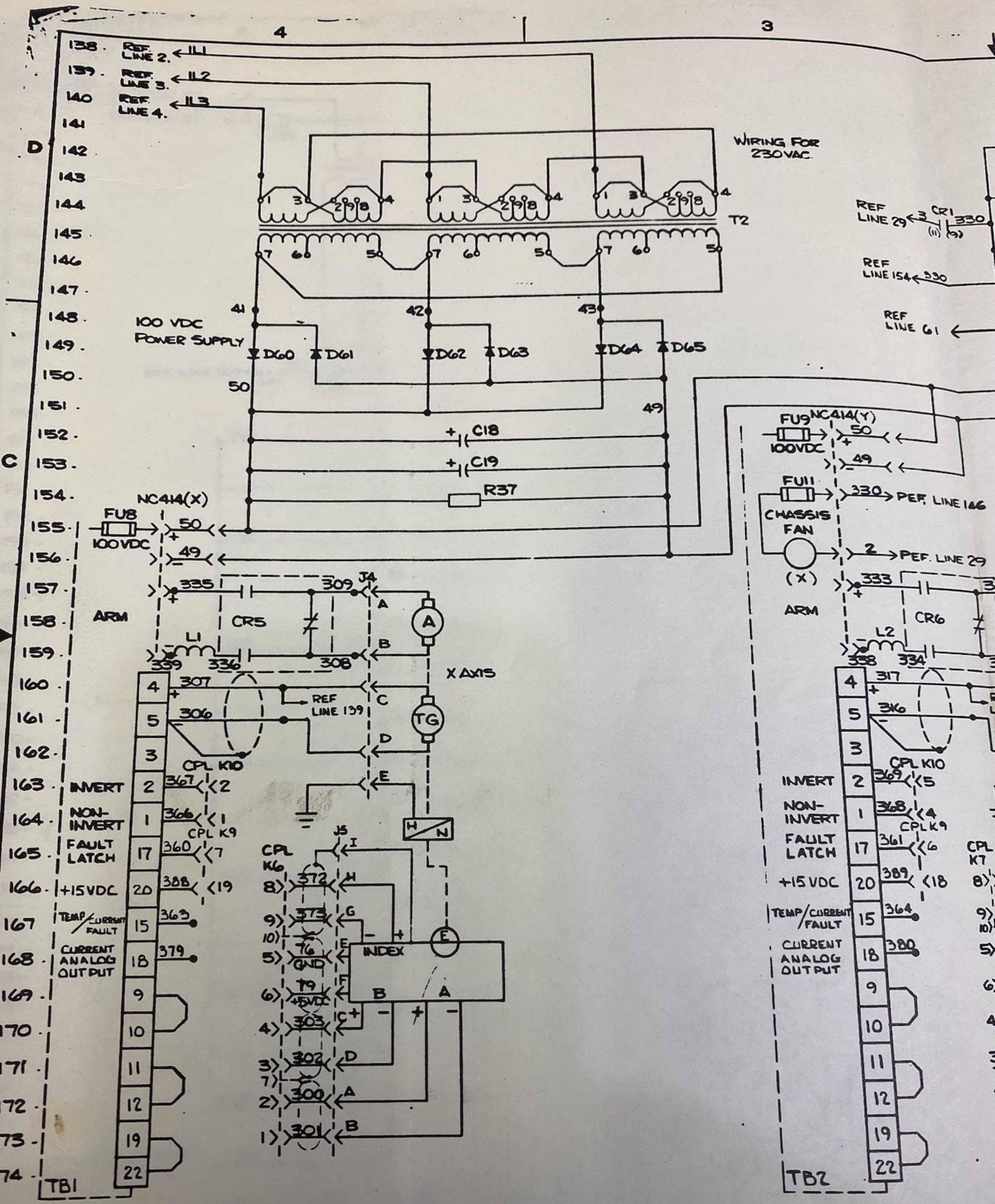

WIRE NUMBERS

IL1, IL2, IL3, 2, 3, 41, 42, 43, 49, 50, 76, 79, 104, 300 THRU 303, 306 THRU 319, 316 THRU 323, 326 THRU 339, 360 THRU 377, 379 THRU 381.

FUSE NUMBERS

FU8 THRU FU12

WIRING FOR 230VAC.

T2

43

D64 D65

49 50

FU9 NC414(Y) 100VDC 50 + 49 −

FU11 CHASSIS FAN (X) 330 → PEF. LINE 146; 2 → PEF. LINE 29

ARM 333 + 319 J6 A; L2 − 338 334 318 B; CR6

YAXIS A TG H/N

317 + REF LINE 140 C; 316 − D; CPL K10 5 E

INVERT 369

NON-INVERT 368 CPL K9 4

FAULT LATCH 361 6

+15 VDC 389 18

TEMP/CURRENT FAULT 364

CURRENT ANALOG OUTPUT 380

TB2

CPL K7 J7 I

8) 374 H

9) 375 G

10) L E

5) TC QD

6) T7 46VDC F

4) 313 C

3) 312 D

7) L

2) 310 A

1) 311 B

INDEX E B A

REF LINE 154 ← 330

REF LINE 29 ← 3 CR1 330 (11) (9)

CR5 CR6 CR7

RCAS 3 RCAS 4 RCAS 5

157, 158, 159

2 → REF. LINE 29

REF LINE 61 ← 76 1M 104 → CPL K9 8

FAULT LATCH INHIBIT

CPL K4 K2

6) X ENC.

7) Y ENC.

8) Z ENC.

5) ENC. LOSS

13) +5V

2) +12V

18) −12V

7) GND

17) GND

FU10 NC414(Z) 100VDC 50 + 49 −

FU12 CHASSIS FAN (Y or Z) 330 → REF. LINE 14; 2 → REF. LINE 2

ARM 331 + L3 − 337 332 CR7

4 327

5 326

3 CPL K10

INVERT 2 371 8

NON-INVERT 1 370 7 CPL K9

FAULT LATCH 17 362 5

+15 VDC 20 390 17

TEMP/CURRENT FAULT 15 365

CURRENT ANALOG OUTPUT 18 381

9 10 11 12 19 22

TB1

DWG NO.	PARTS LIST	MATERIAL: ~
NEXT ASSEMBLY		FINISH: ~
		MARKING: PER A027099
		TYPE: , CLASS: , POINT
		REMOVE BURRS AND SHARP EDGES. INTERNAL CORNERS (.4mm (.016)) MAX.

DIME… UNLESS OTH… ALL DIMENSIONS… MM (INCH) THIRD ANGLE PROJECTION

D1933506

2 1

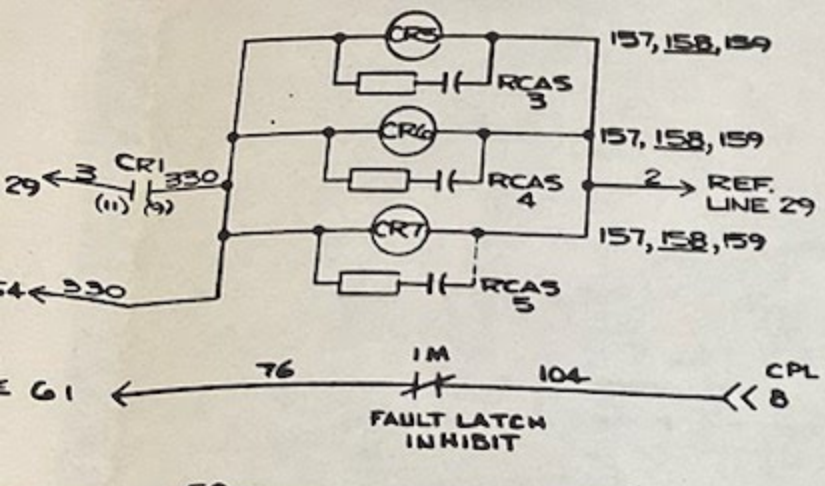

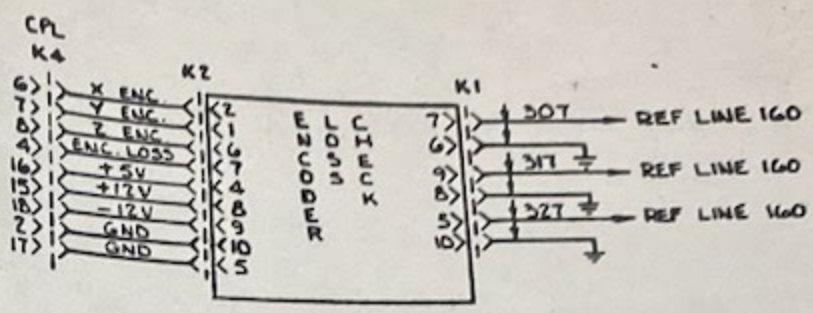

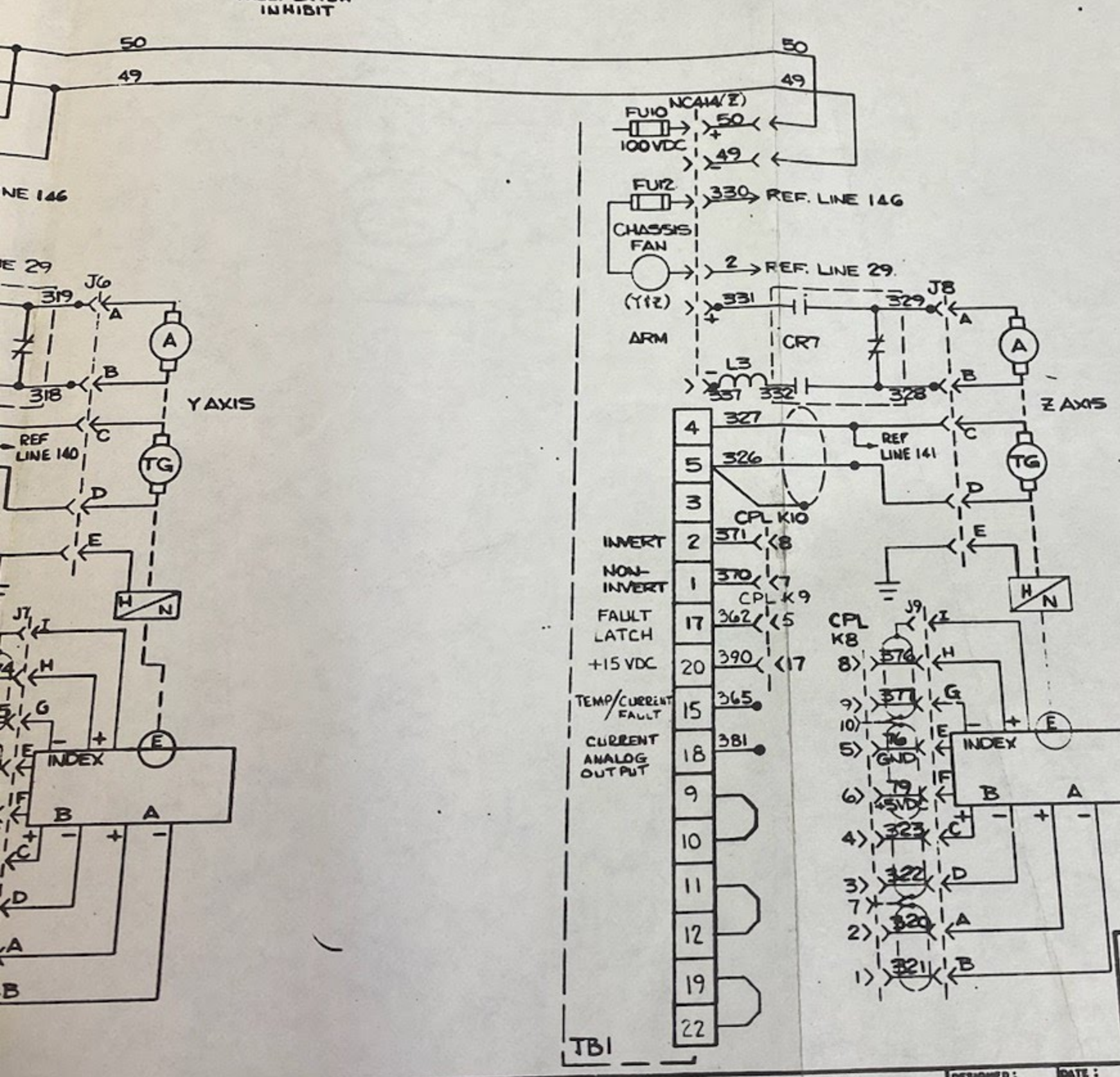

LTR	DCN NO	CHG'D	APPV'D	DATE
A	DCN 2790B 10/30/81	SAS		10-30-81
0	INITIAL RELEASE			6-24-81

REVISION

Bridgeport TEXTRON
Bridgeport Machines Division of Textron Inc.
CONTROLS MANUFACTURING PLANT
200 Precision Road, Horsham, Pa. 19044

DWG NO.	PARTS LIST
NEXT ASSEMBLY	

MATERIAL: ~
FINISH: ~
MARKING: PER A027099
TYPE: , CLASS: , POINT
REMOVE BURRS AND SHARP EDGES. INTERNAL CORNERS (.4mm .016) MAX.

DIMENSIONING
UNLESS OTHERWISE SPECIFIED ALL DIMENSIONS ARE IN MILLIMETERS
MM (INCH)
THIRD ANGLE PROJECTION
TOLERANCES
MM .X = ± ( )
ANGLE .X = ± .5°

DESIGNED: DATE:
DRAWN: L.H. SEYBOLD DATE: 81-25-02
CHECKED: DATE:
APPROVED: DATE: 6-24-81
PROJECT NO. 846
MODEL NO. BTC

THIS DOCUMENT/DRAWING PROVIDES INFORMATION WHICH IS PROPRIETARY TO BRIDGEPORT MACHINES AND IS MADE AVAILABLE TO YOU FOR THE USE AND MAINTENANCE OF OUR PRODUCTS. ANY USE, REPRODUCTION, OR DISSEMINATION OF THIS INFORMATION FOR ANY OTHER PURPOSE IS PROHIBITED WITHOUT WRITTEN PERMISSION

TITLE
SYSTEM WIRING DIAGRAM
SERIES I-BTC LOW PROFILE

SIZE D | CODE IDENT NO. | DWG NO. 1933506 | REV
SCALE : DO NOT SCALE DWG | SHEET 5 OF 8

2 1 1 1

Earle M. Jorgensen Company

22011 76th Avenue South
Kent, WA 98032

Tel: 253.872.0100
Nat: 800.323.5852
Fax: 253.872.8552
http://www.emjmetals.com

TO: LOOKING AT BACK OF MACHINE

DATE:

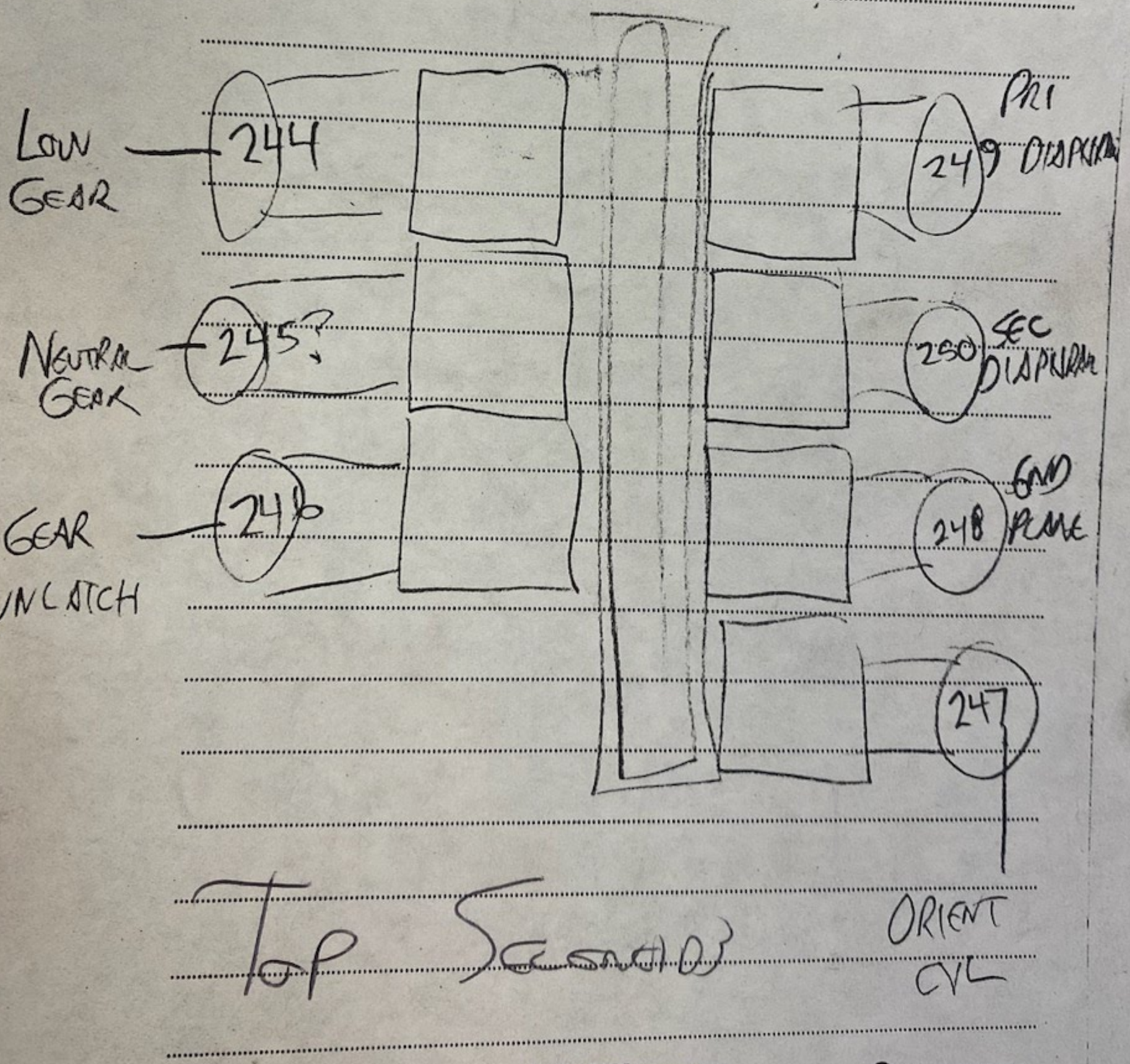

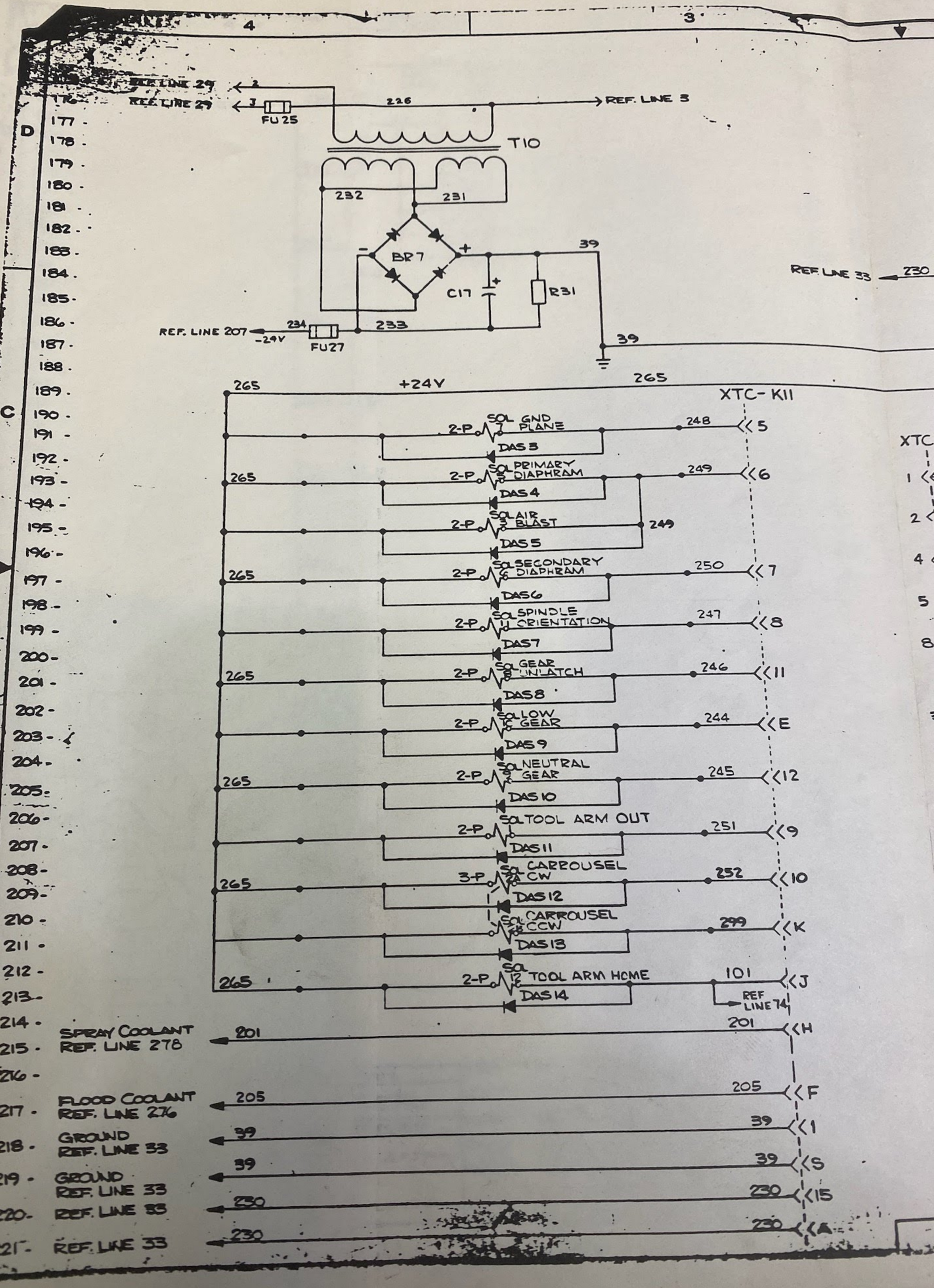
4
3
REF LINE 29
REF LINE 29
FU25
226
REF. LINE 3
T10
232
231
BR7
39
C17
R31
REF LINE 33
230
REF. LINE 207
-24V
234
FU27
233
39
+24V
265
XTC-K11
2-P
SOL 1 GND PLANE
DAS 3
248
5
SOL 2 PRIMARY DIAPHRAM
DAS 4
249
6
SOL 3 AIR BLAST
DAS 5
SOL 4 SECONDARY DIAPHRAM
DAS 6
250
7
SOL 11 SPINDLE ORIENTATION
DAS 7
247
8
SOL 8 GEAR UNLATCH
DAS 8
246
11
SOL C LOW GEAR
DAS 9
244
E
SOL 9 NEUTRAL GEAR
DAS 10
245
12
SOL TOOL ARM OUT
DAS 11
251
9
3-P
SOL A CARROUSEL CW
DAS 12
252
10
SOL B CARROUSEL CCW
DAS 13
299
K
SOL 12 TOOL ARM HOME
DAS 14
101
J
REF LINE 74
SPRAY COOLANT
REF. LINE 278
201
H
FLOOD COOLANT
REF. LINE 276
205
F
GROUND
REF. LINE 33
1
S
15
A

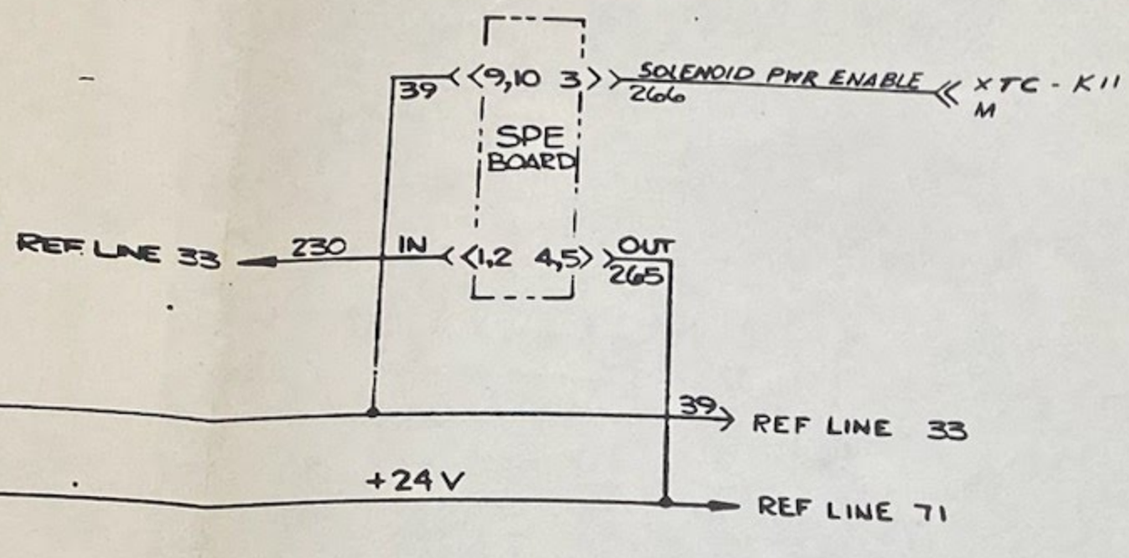

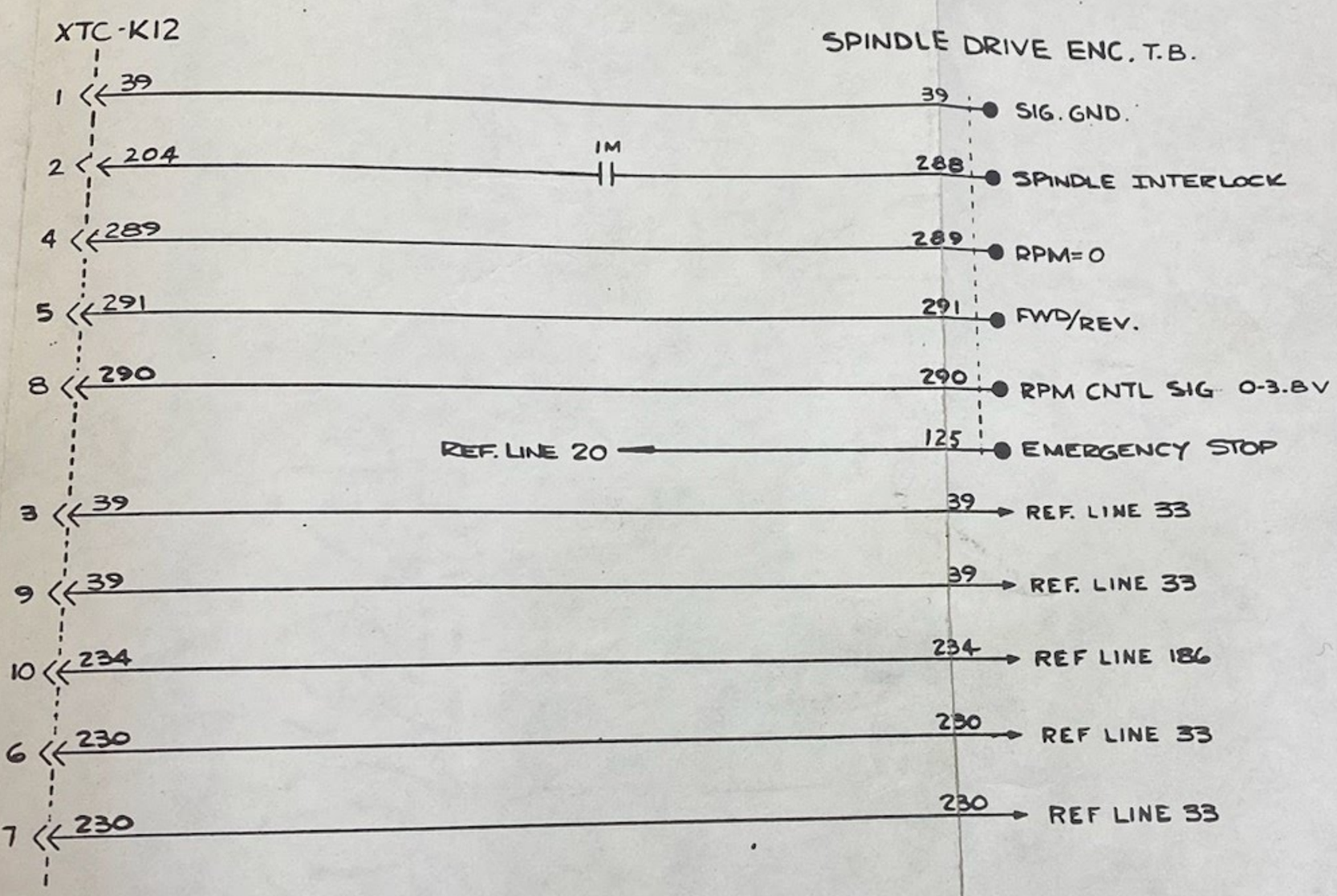

WIRE NOS.

2, 3, 39, 101, 204, 205, 226, 230 THRU 234. 244 THRU 252, 265, 266, 288 THRU 291, 299.

LTR	DCN NO.	CHG'D	APPV'D	DATE
0	INITIAL RELEASE	X		6-24-81

REVISION

Bridgeport® TEXTRON

Bridgeport Machines Division of Textron Inc.

CONTROLS MANUFACTURING PLANT
200 Precision Road, Horsham, Pa. 19044

THIS DOCUMENT/DRAWING PROVIDES INFORMATION WHICH IS PROPRIETARY TO BRIDGEPORT MACHINES AND IS MADE AVAILABLE TO YOU FOR THE USE AND MAINTENANCE OF OUR PRODUCTS. ANY USE, REPRODUCTION, OR DISSEMINATION OF THIS INFORMATION FOR ANY OTHER PURPOSE IS PROHIBITED WITHOUT WRITTEN PERMISSION.

MATERIAL :	
FINISH :	
MARKING: PER A027099	
TYPE: , CLASS: , POINT	
REMOVE BURRS AND SHARP EDGES. INTERNAL CORNERS (.016) 4mm MAX.	
DWG NO.	PARTS LIST
NEXT ASSEMBLY	

DIMENSIONING	
UNLESS OTHERWISE SPECIFIED ALL DIMENSIONS ARE IN MILLIMETERS	
MM (INCH)	TOLERANCES
THIRD ANGLE PROJECTION	MM .X = ± ( )
	ANGLE , X = ± .5°

DESIGNED :	DATE :
DRAWN : J.H. SEYBOLD	DATE : 81-25-2
CHECKED :	DATE :
APPROVED :	DATE : 6-24-81
PROJECT NO. 846	MODEL NO. BTC

TITLE
SYSTEMS WIRING DIAGRAM
SERIES 1-BTC LOW PROFILE

SIZE	CODE IDENT NO.	DWG NO.	REV.
D		1933506	0

SCALE : DO NOT SCALE DWG — SHEET 6 OF 8

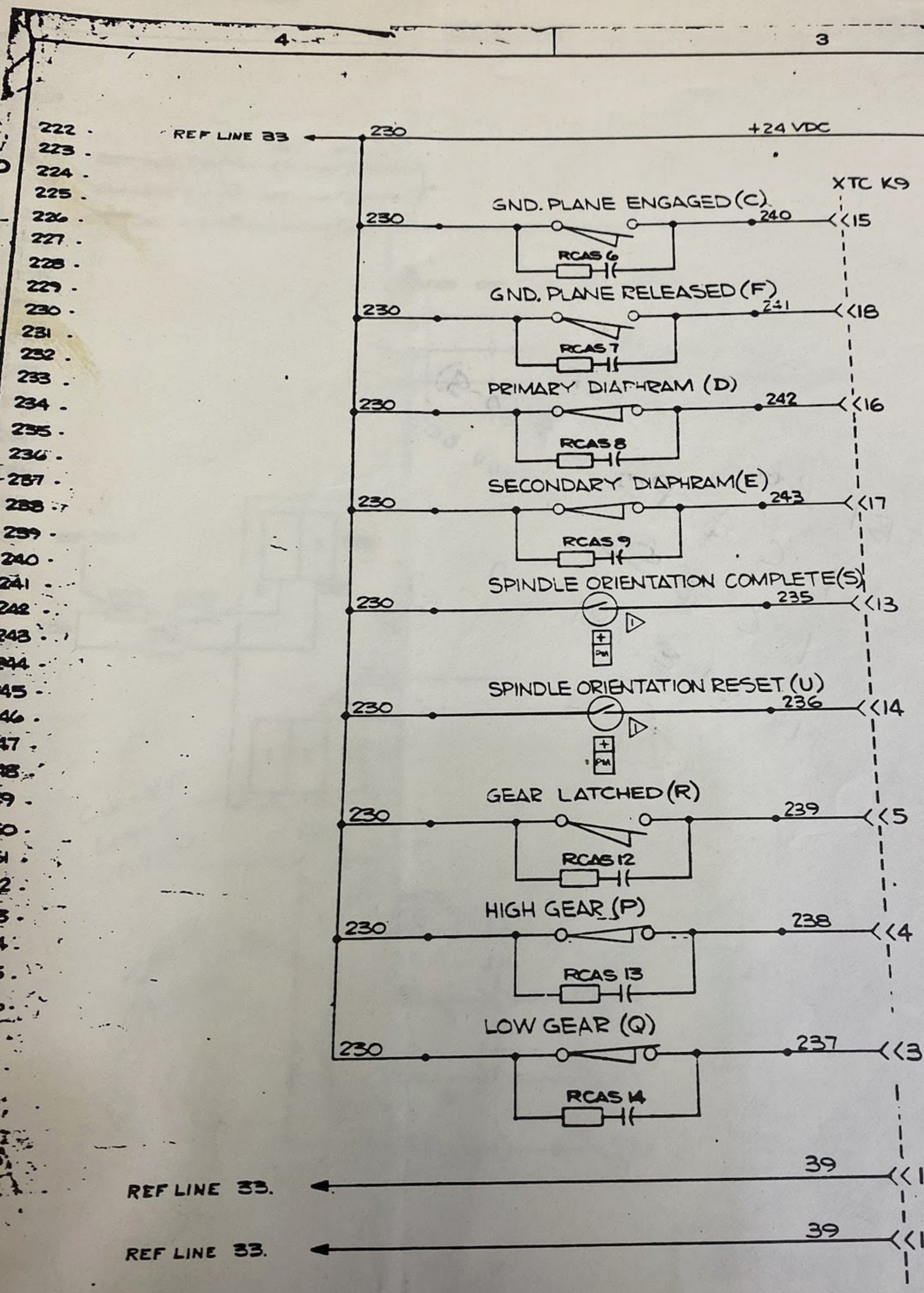
REF LINE 33
230
+24 VDC
XTC K9
GND. PLANE ENGAGED (C)
230
240
15
RCAS 6
GND. PLANE RELEASED (F)
230
241
18
RCAS 7
PRIMARY DIAPHRAM (D)
230
242
16
RCAS 8
SECONDARY DIAPHRAM (E)
230
243
17
RCAS 9
SPINDLE ORIENTATION COMPLETE (S)
230
235
13
SPINDLE ORIENTATION RESET (U)
230
236
14
GEAR LATCHED (R)
230
239
5
RCAS 12
HIGH GEAR (P)
230
238
4
RCAS 13
LOW GEAR (Q)
230
237
3
RCAS 14
39
1
REF LINE 33.
39
11
REF LINE 33.
NOTES
REED SWITCH, M
ACTUATED
REF LINE 33

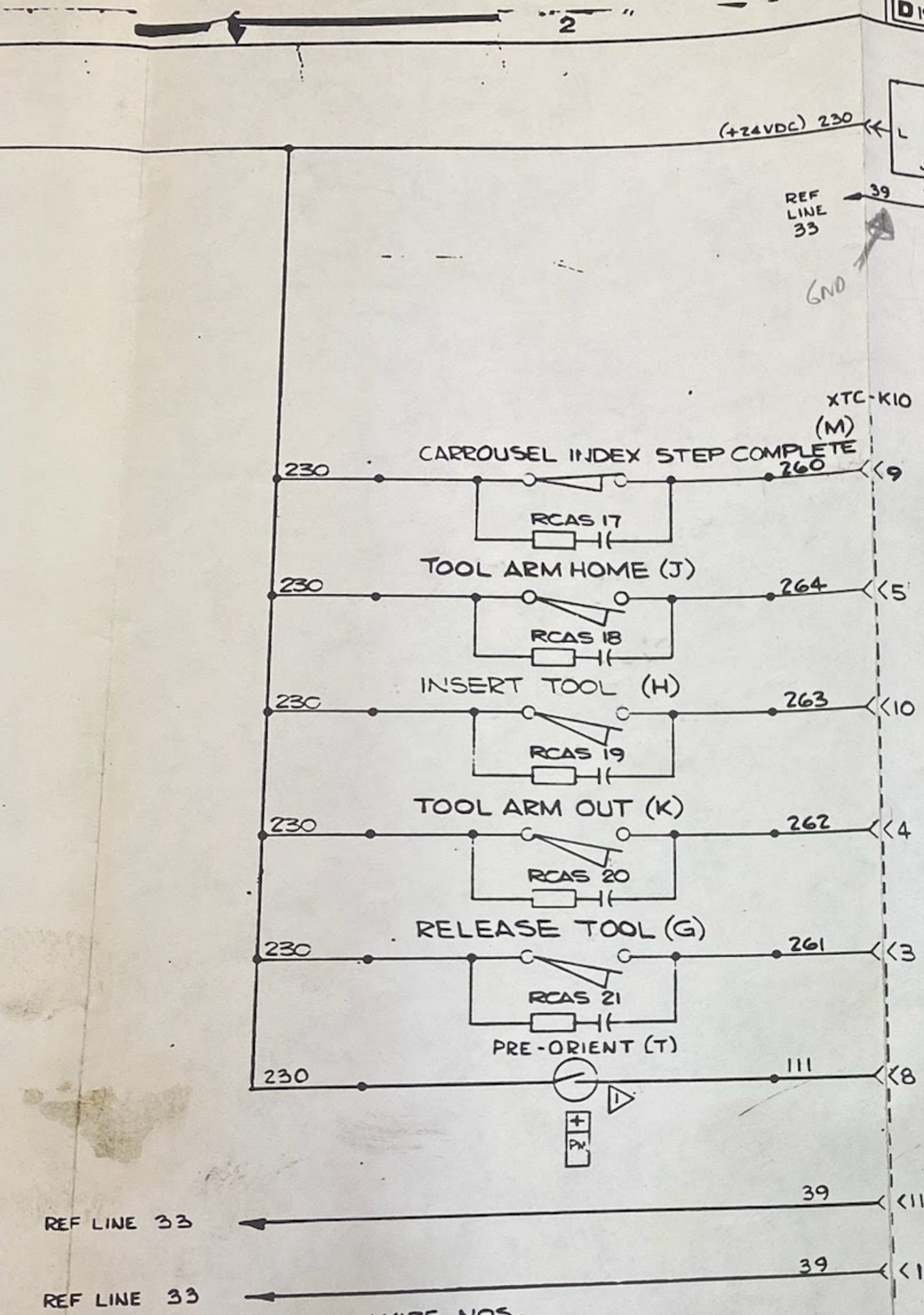

WIRE NOS.

39, 111, 230, 235 THRU 243
259 THRU 264, 383 THRU 387

ES

D SWITCH, MAGNETICALLY
TUATED

CARROUSEL ENCODER TRUTH TABLE

TOOL	PS-A	PS-B	PS-C	PS-D	PS-E
1	0	0	0	1	0
2	0	0	0	1	1
3	0	0	1	0	1
4	0	0	1	0	0
5	0	0	1	1	0
6	0	0	1	1	1
7	0	1	1	0	1
8	0	1	1	0	0
9	0	1	1	1	0
10	0	1	1	1	1
11	1	1	1	0	1
12	1	1	1	0	0
13	1	1	1	1	0
14	1	1	1	1	1
15	1	1	0	0	1
16	1	1	0	0	0
17	1	1	0	1	0
18	1	1	0	1	1
19	1	0	0	0	1
20	1	0	0	0	0
21	1	0	0	1	0
22	1	0	0	1	1
23	0	0	0	0	1
24	0	0	0	0	0

SWITCH DEPRESSED = 0.0 VDC ON "O" TERMINAL
SWITCH RELEASED = 7.5 VDC ON "O" TERMINAL

LTR	REVISION	CHG'D	APPV'D	DATE
0	INITIAL RELEASE	X		6-24-81

Bridgeport® TEXTRON
Bridgeport Machines Division of Textron Inc.
CONTROLS MANUFACTURING PLANT
200 Precision Road, Horsham, Pa. 19044

THIS DOCUMENT/DRAWING PROVIDES INFORMATION WHICH IS PROPRIETARY TO BRIDGEPORT MACHINES AND IS MADE AVAILABLE TO YOU FOR THE USE AND MAINTENANCE OF OUR PRODUCTS. ANY USE, REPRODUCTION, OR DISSEMINATION OF THIS INFORMATION FOR ANY OTHER PURPOSE IS PROHIBITED WITHOUT WRITTEN PERMISSION.

MATERIAL:	DIMENSIONING UNLESS OTHERWISE SPECIFIED ALL DIMENSIONS ARE IN MILLIMETERS	DESIGNED:	DATE:	TITLE: SYSTEMS WIRING DIAGRAM SERIES I - BTC LOW PROFILE
FINISH:	MM (INCH) / TOLERANCES	DRAWN: SEYBOLD	DATE: 5-25-82	
MARKING: PER A027099	THIRD ANGLE PROJECTION	CHECKED:	DATE:	SIZE: D; CODE IDENT NO.; DWG NO.: 1933506; REV.: 0
TYPE: , CLASS: , POINT	MM .X = ± ( )	APPROVED:	DATE: 6-24-81	SCALE: DO NOT SCALE DWG; SHEET 7 OF 8
REMOVE BURRS AND SHARP EDGES. INTERNAL CORNERS (.4mm .016) MAX.	ANGLE .X = ± .5°	PROJECT NO.: 846	MODEL NO.: BTC	
DWG NO. / PARTS LIST / NEXT ASSEMBLY				

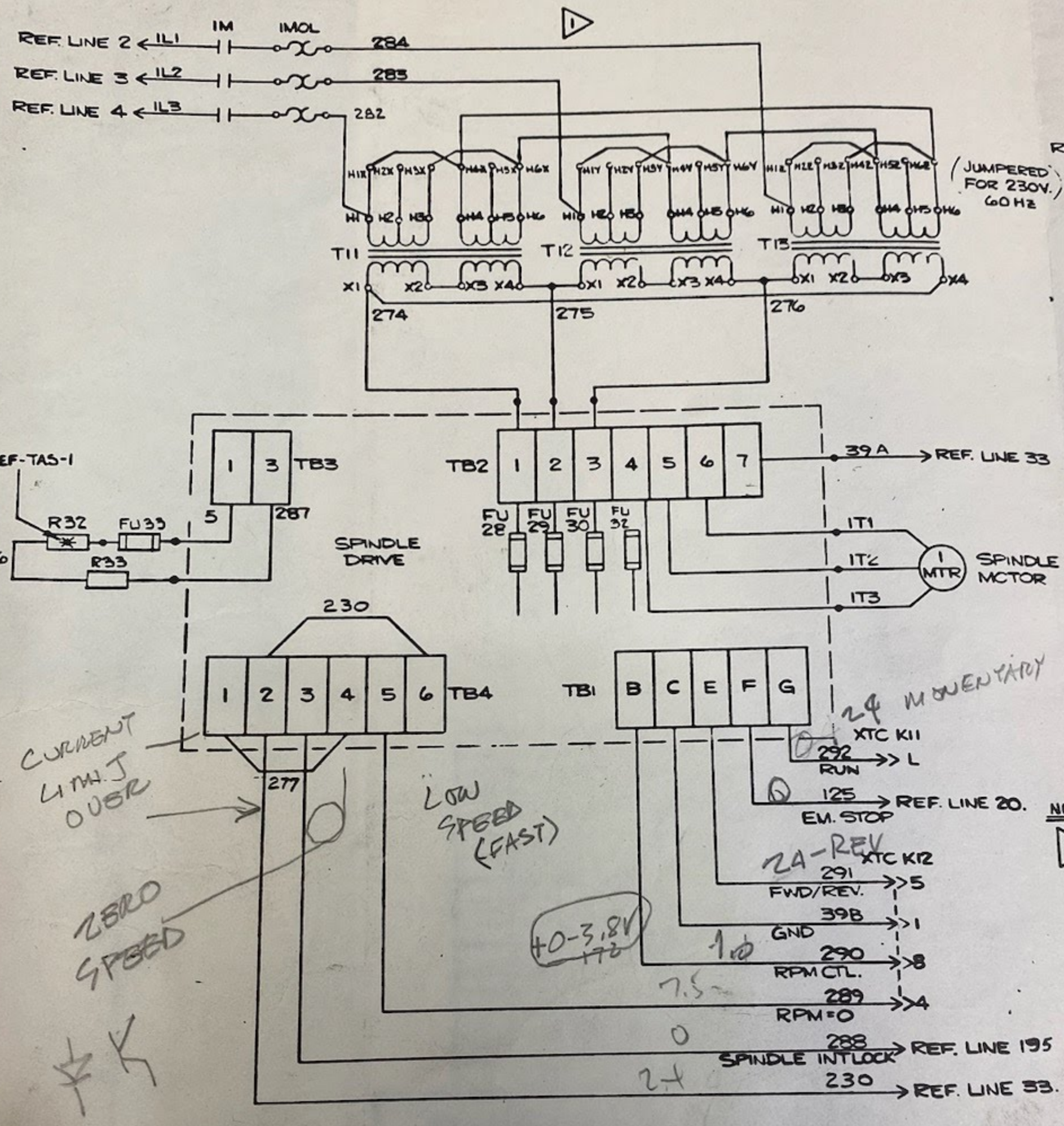

WIRE NUMBERS

IL1, IL2, IL3, 2, 3, 5, 39, 76, 79, 98, 121, 125, 193, 195, 197 THRU 202, 205, 230, 274 THRU 276, 282, THRU 292, 391.

FUSE NUMBERS

FU6, FU23, FU24, FU28 THRU FU30, FU32.

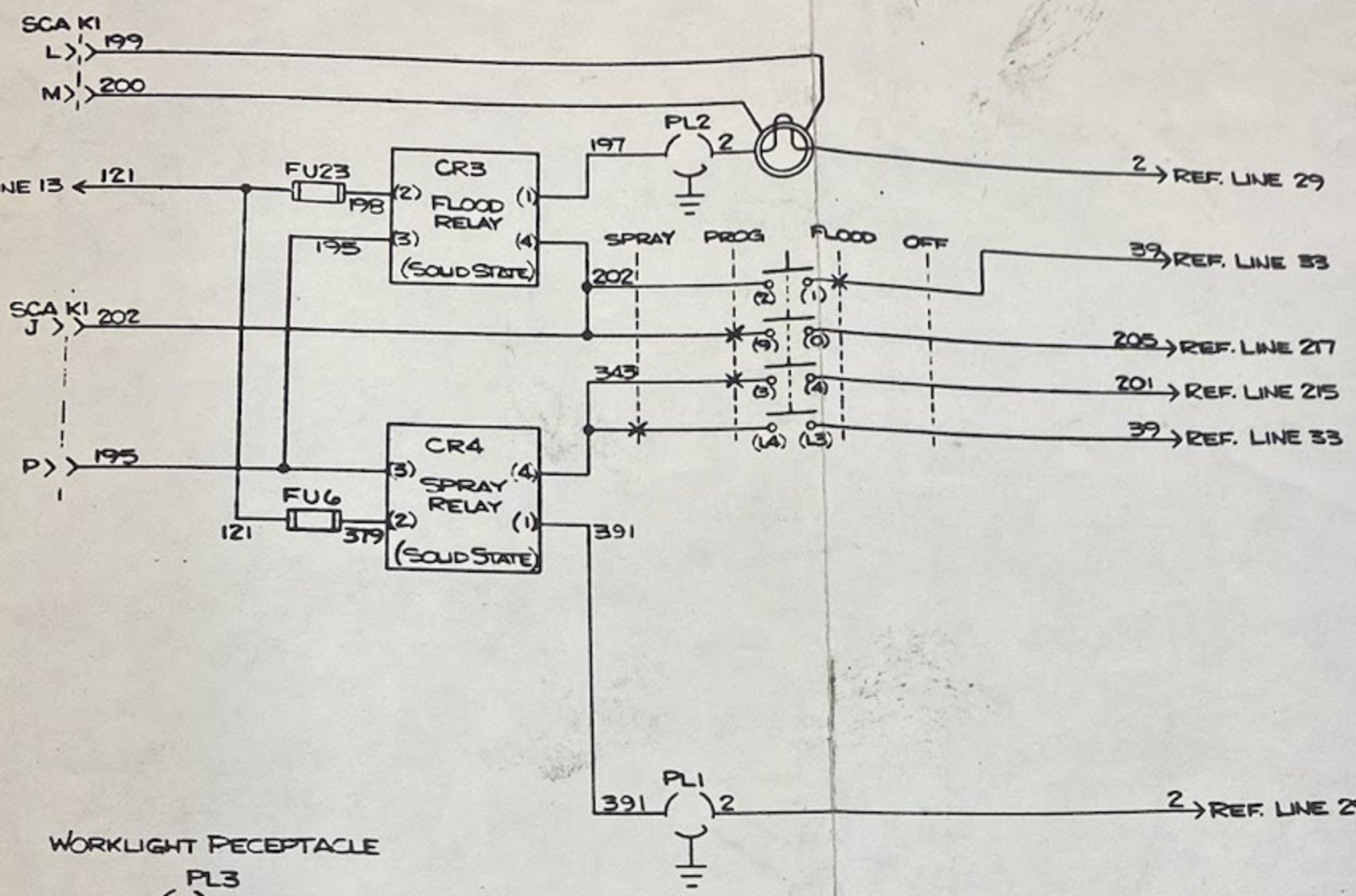

WORKLIGHT PECEPTACLE

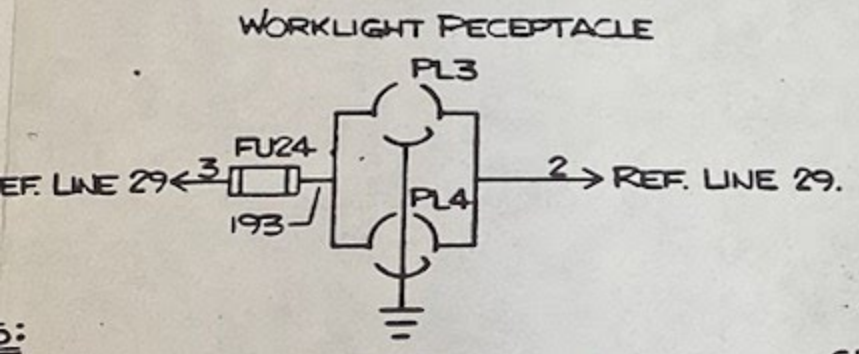

SPINDLE SPEED FEEDBACK

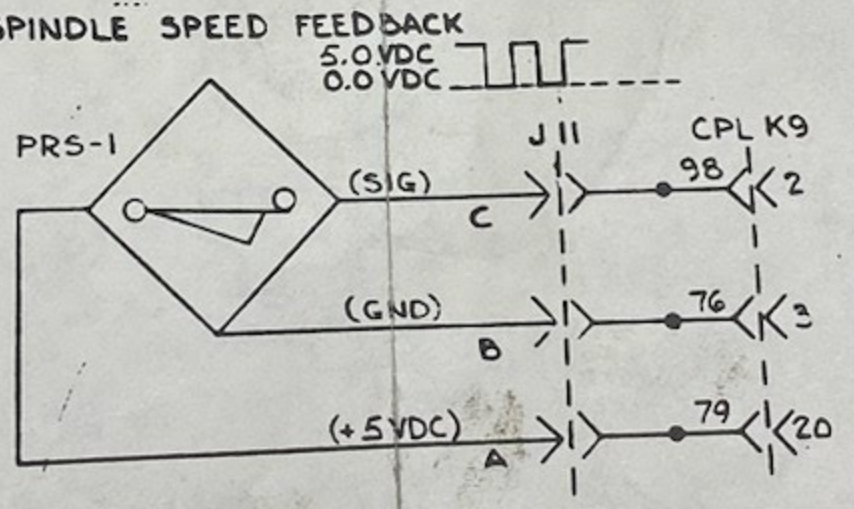

T11, T12 & T13 JUMPERING INFORMATION

50 HZ

230V	380V	416V	460V
TO H3X	H2X TO H3X	H2X TO H3X	H2X TO H3X
TO H6X	H2Y TO H3Y	H2Y TO H3Y	H2Y TO H3Y
TO H3Y	H2Z TO H3Z	H2Z TO H3Z	H2Z TO H3Z
TO H6Y	H1X TO H4Y	H1X TO H5Y	H1X TO H6Y
TO H3Z	H1Y TO H4Z	H1Y TO H5Z	H1Y TO H6Z
TO H6Z	H1Z TO H4X	H1Z TO H5X	H1Z TO H6X
TO H6Y			
TO H6Z			
TO H6X			

60 HZ

380V	230V	460V
TO H4X	H1X TO H4X	H3X TO H4X
TO H5X	H3X TO H6X	H3Y TO H4Y
TO H4Y	H1Y TO H4Y	H3Z TO H4Z
TO H5Y	H3Y TO H6Y	H1X TO H6Y
TO H4Z	H1Z TO H4Z	H1Y TO H6Z
TO H5Z	H3Z TO H6Z	H1Z TO H6X
TO H5Y	H1X TO H6Y	
TO H5Z	H1Y TO H6Z	
TO H5X	H1Z TO H6X	

LTR	DCN NO.	CHK'D	APPVD	DATE
0	INITIAL RELEASE	X		6-29-81

REVISION

Bridgeport TEXTRON
Bridgeport Machines Division of Textron Inc.
CONTROLS MANUFACTURING PLANT
200 Precision Road, Horsham, Pa. 19044

THIS DOCUMENT/DRAWING PROVIDES INFORMATION WHICH IS PROPRIETARY TO BRIDGEPORT MACHINES AND IS MADE AVAILABLE TO YOU FOR THE USE AND MAINTENANCE OF OUR PRODUCTS. ANY USE, REPRODUCTION, OR DISSEMINATION OF THIS INFORMATION FOR ANY OTHER PURPOSE IS PROHIBITED WITHOUT WRITTEN PERMISSION.

DESIGNED:	DATE:
DRAWN: J.H SEYBOLD	DATE: 81-25-07
CHECKED:	DATE:
APPROVED:	DATE: 6-29-81

TITLE: SYSTEM WIRING DIAGRAM SERIES I-BTC LOW PROFILE

PROJECT NO.	MODEL NO.	SIZE	CODE IDENT NO.	DWG NO.	REV.
846	BTC	D		1933506	0

SCALE : DO NOT SCALE DWG SHEET 8 OF 8

MATERIAL:
FINISH:
MARKING: PER A027099
TYPE: , CLASS: , POINT
REMOVE BURRS AND SHARP EDGES. INTERNAL CORNERS .4mm (.016) MAX.

DIMENSIONING
UNLESS OTHERWISE SPECIFIED ALL DIMENSIONS ARE IN MILLIMETERS
MM (INCH)
THIRD ANGLE PROJECTION
TOLERANCES
MM .X = ±
ANGLE .X = ±.5°

DWG NO. | PARTS LIST
NEXT ASSEMBLY

CR4

(4) SPRAY RELAY

(1)

391

SOLID STATE)

PL1

391 ( ) 2

2 → REF. LINE 29

LINE 29.

SPINDLE SPEED FEEDBACK

5.0 VDC
0.0 VDC

CPL K9

J 11

PRS-1

(SIG) C — 98 — K2

(GND) B — 76 — K3

(+5 VDC) A — 79 — K20

DV
H3X
H3Y
H3Z
H6Y
H6Z
H6X

DIMENSIONING	DESIGNED:	DATE:
UNLESS OTHERWISE SPECIFIED ALL DIMENSIONS ARE IN MILLIMETERS	DRAWN: J.H SEYBOLD	DATE: 81-25-02
TOLERANCES	CHECKED:	DATE:
		DATE:

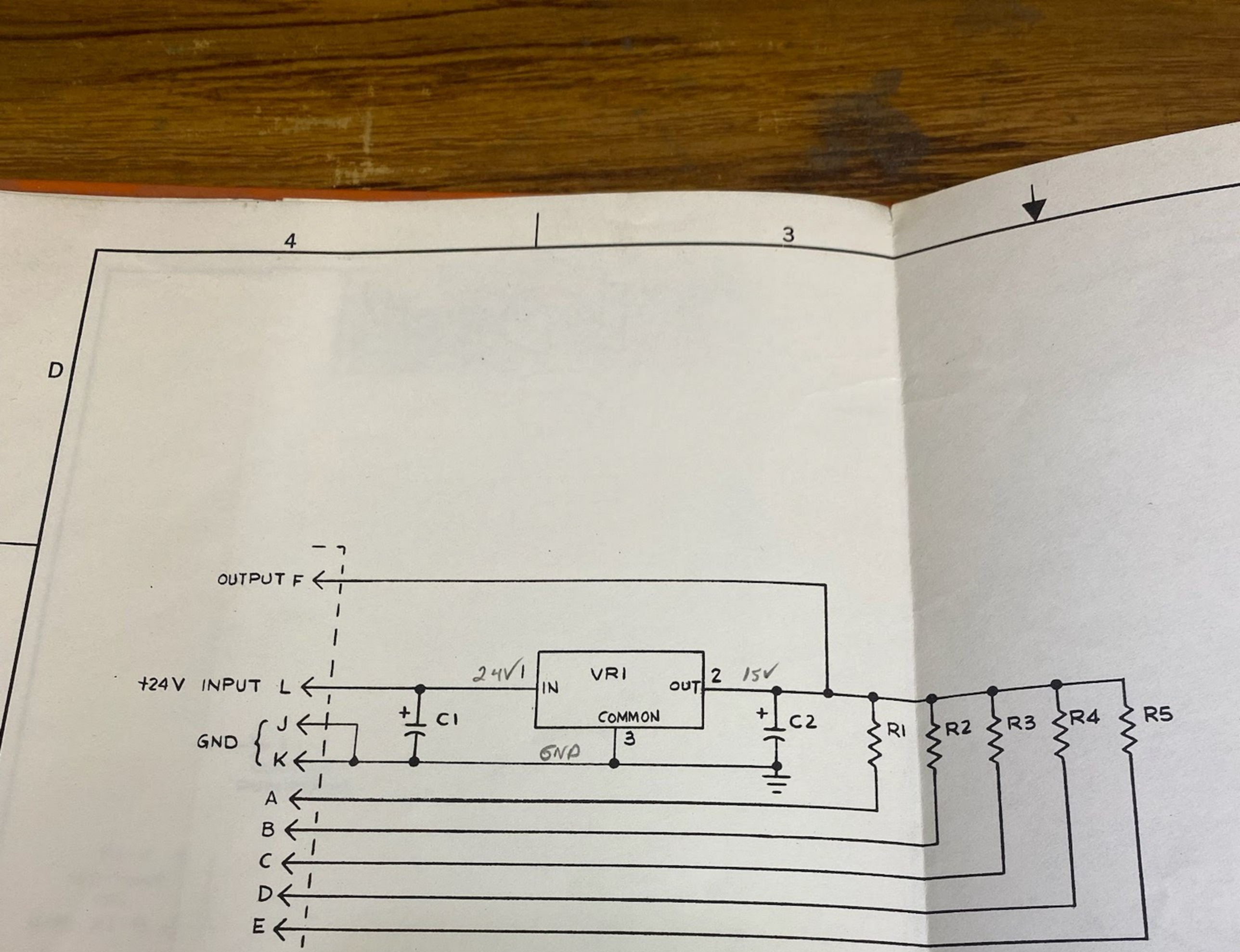
4
3
D
OUTPUT F
+24V INPUT L
GND
J
K
24V
IN
VR1
OUT
2
15V
COMMON
3
GND
C1
C2
R1
R2
R3
R4
R5
A
B
C
D
E

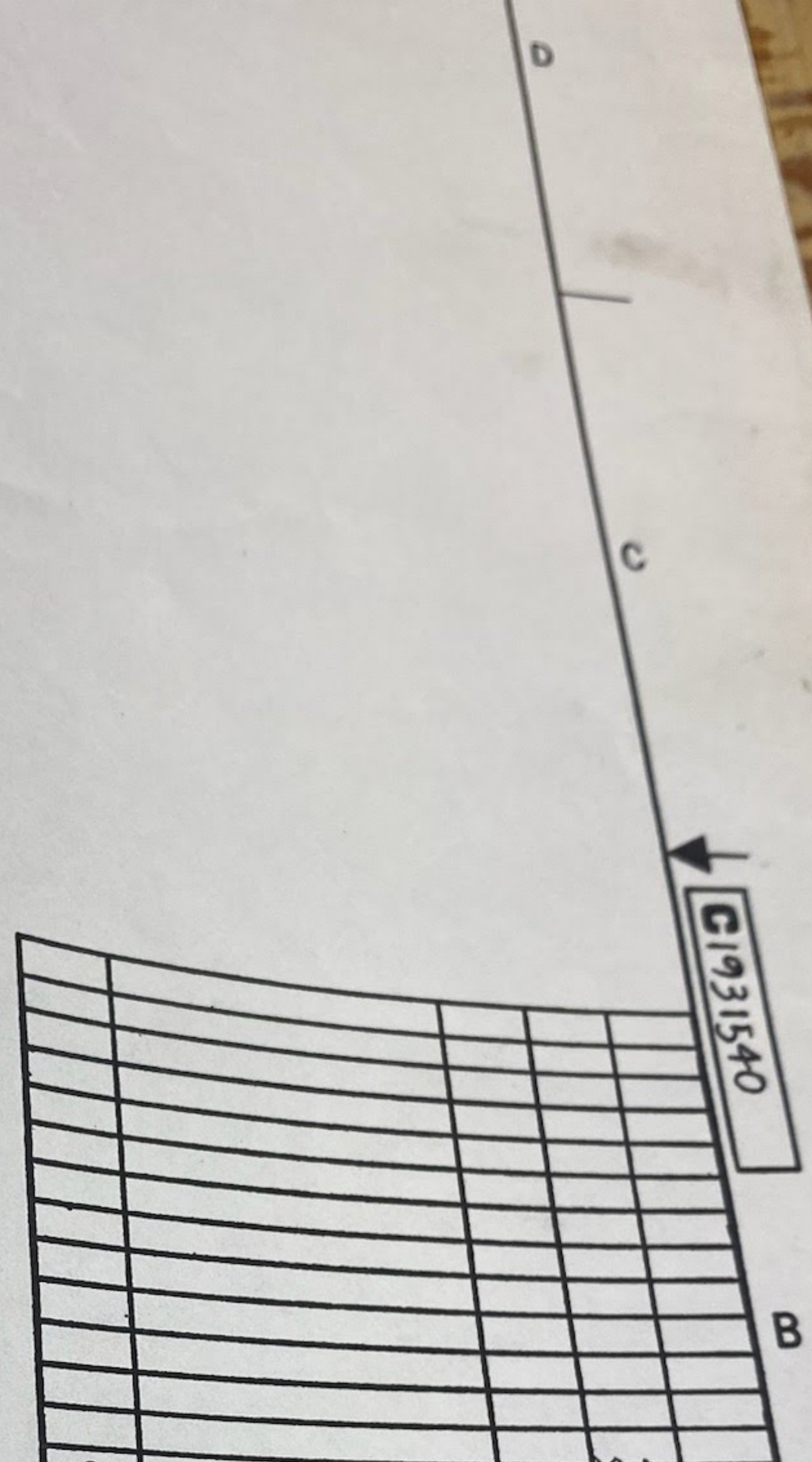

LTR	DCN NO.	CHG'D	APPV'D	DATE
0	INITIAL RELEASE	X		3/5/80

REVISION

Bridgeport® TEXTRON

Bridgeport Machines Division of Textron Inc.

CONTROLS MANUFACTURING PLANT
200 Precision Road, Horsham, Pa. 19044

THIS DOCUMENT/DRAWING PROVIDES INFORMATION WHICH IS PROPRIETARY TO BRIDGEPORT MACHINES AND IS MADE AVAILABLE TO YOU FOR THE USE AND MAINTENANCE OF OUR PRODUCTS. ANY USE, REPRODUCTION, OR DISSEMINATION OF THIS INFORMATION FOR ANY OTHER PURPOSE IS PROHIBITED WITHOUT WRITTEN PERMISSION.

SIONING	DESIGNED: M. P	DATE: 80-9-06
ISE SPECIFIED IN MILLIMETERS	DRAWN: M. Pawlowski	DATE: 80-9-06
OLERANCES	CHECKED: M.P	DATE: 80-9-06
.X = ± ( )	APPROVED: [illegible]	DATE: 3/5/80
	PROJECT NO. 846	MODEL NO. ATC

TITLE

ADP SCHEMATIC

SIZE	CODE IDENT NO.	DWG NO.	REV.
C		1931540	0

SCALE —:— DO NOT SCALE DWG — SHEET 2 OF 2

A

1

2

BTR	REVISION DESCRIPTION	DATE	APPROVAL
0	RELEASE FOR PRODUCTION	7-6-77	
A	DCN17930 LD	8/22/77	
B	DCN18287 LD	9/19/77	
C	DCN 18352	10-5-77	

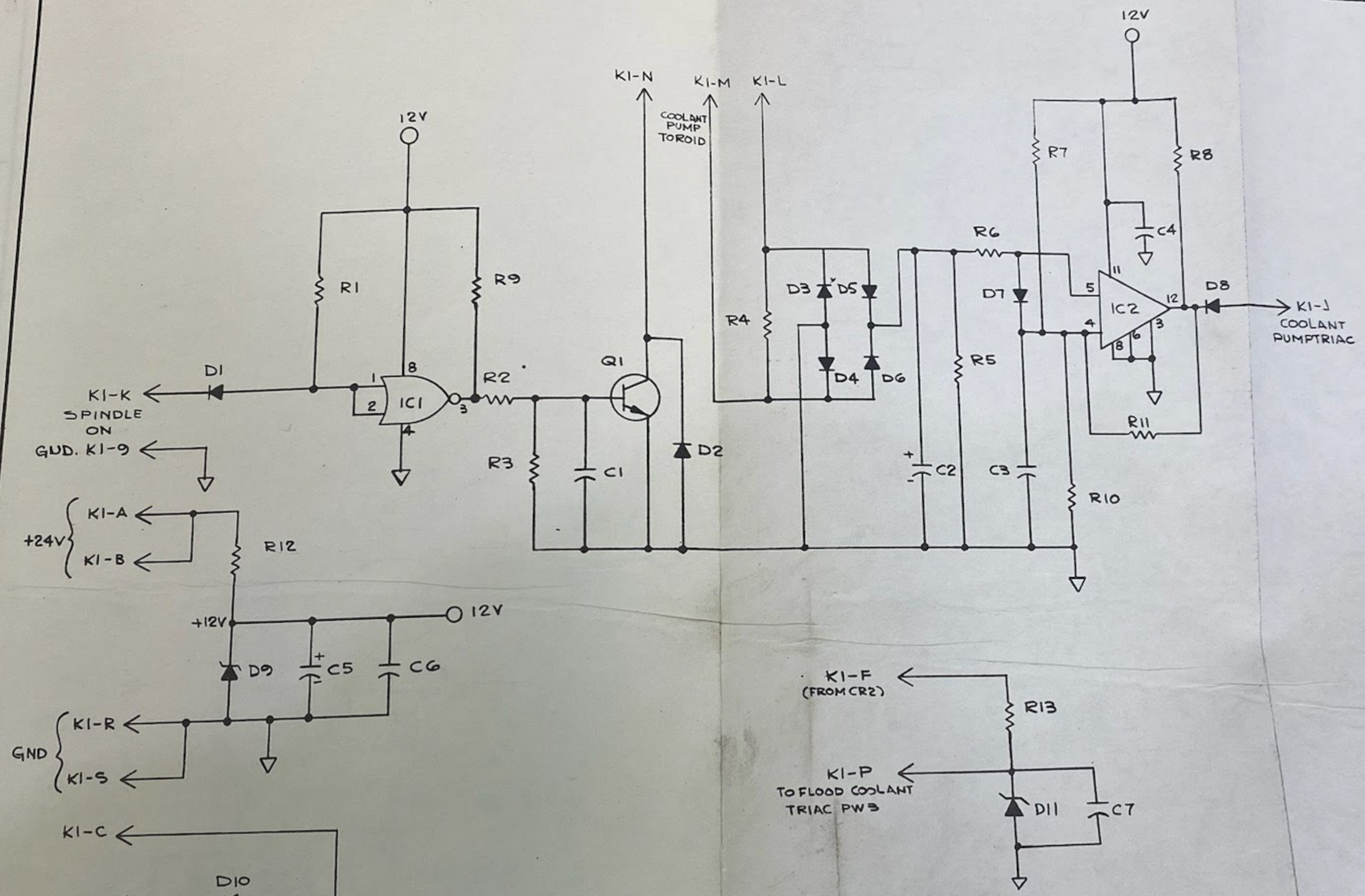

C1926296

		UNLESS OTHERWISE SPECIFIED	UNLESS OTHERWISE SPECIFIED DIMENSIONS ARE IN INCHES	DATE OF DRAWING 6-23-77	SCHEMATIC DIAGRAM SCA BOARD	Bridgeport TEXTRON Bridgeport Machines Division of Textron Inc.
		REMOVE BURRS & SHARP EDGES INTERNAL CORNERS .015 R. MAX.	TOLERANCES ON DECIMALS ± ANGLES ± FRACTIONS ±	DRAFTSMAN L. DURYEA		CONTROL MFG. PLANT HORSHAM. PA.
		✓ FINISH ALL OVER	MATERIAL: ~	CHECKED BY EFL		THIS DRAWING MAY NOT BE COPIED OR REPRODUCED WITHOUT PERMISSION
		APPLY PART NO.	HEAT TREATMENT: ~	APPROVED BY		C 1126296 C
NEXT ASSY	PARTS LIST NO.	METHOD: CHARACTERS	PROTECTIVE FINISH: ~	SUBMITTED:		
APPLICATION				APPROVED:	SCALE ~ UNIT WT.	CODE SHEET 2 OF 2

DO NOT SCALE DRAWING

BARCLAY BROS., INC.

5. Install indicator on table as described in step [illegible]

6. Adjust indicator for zero with the ability to read at least .0005" overall, both plus and minus.

7. Move table away from spindle 10mm.

8. Change axis direction and move table back under the spindle 10mm.

9. Read indicator. The reading should be zero or minus .0001". If greater or plus, check the step setup in step 9 (above).

   If the axis will perform the above tests, the axis compensation for that axis is complete.

10. Repeat for each axis.

7.7 Adjustment Procedure for Spindle Speed

This procedure ensures that the proper spindle speed command is sent to the spindle drive circuits.

7.7.1 Tools Required

1. VOM
2. Small screwdriver
3. Hand-held tachometer

7.7.2 Procedure

1. At the Operator's Main Control Panel, set the system to the MDI mode.
2. Open the door of the Control Equipment Enclosure

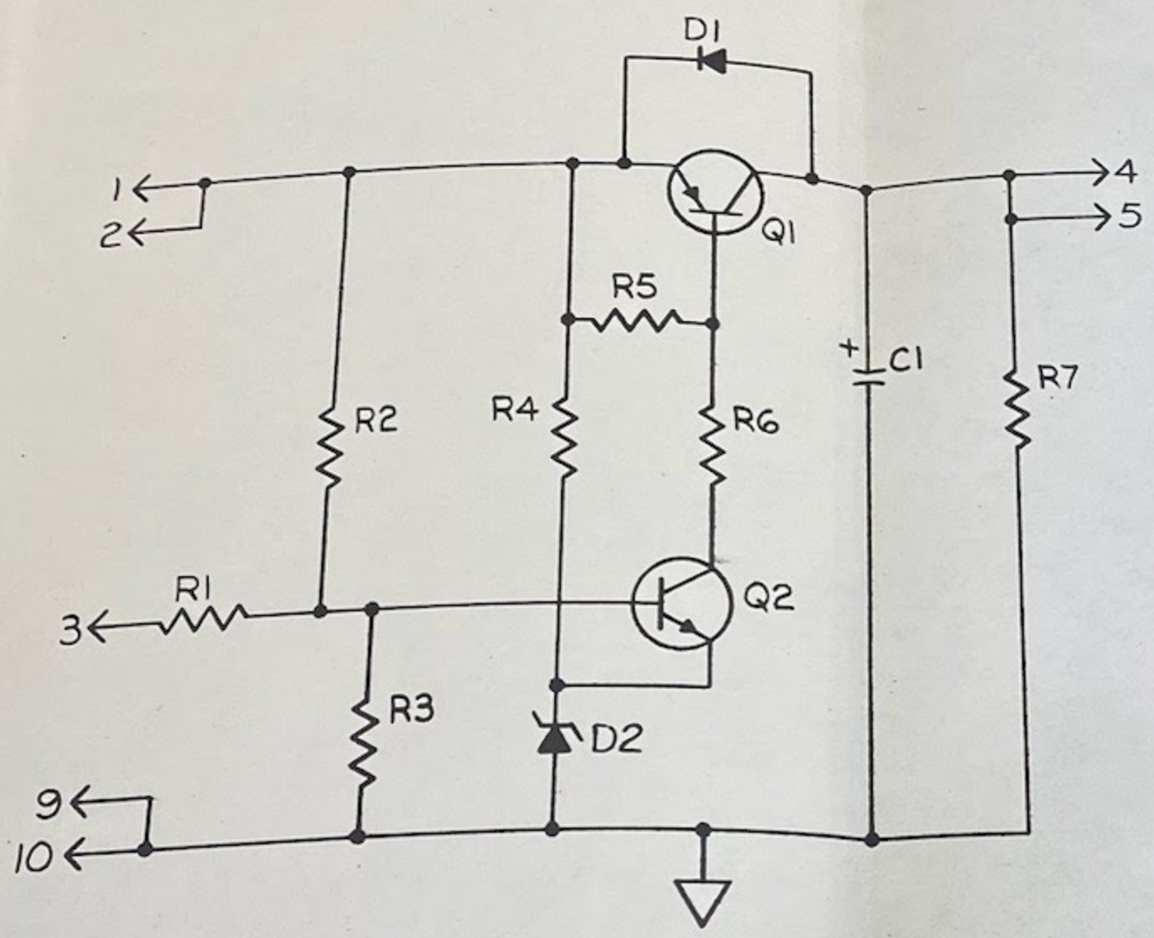

LTR	DCN NO.	CHG'D	APPV'D	DATE
0	INITIAL RELEASE			10-6-78

REVISION

C1928565

Bridgeport® TEXTRON

Bridgeport Machines Division of Textron Inc.

CONTROLS MANUFACTURING PLANT
200 Precision Road, Horsham, Pa. 19044

THIS DOCUMENT/DRAWING PROVIDES INFORMATION WHICH IS PROPRIETARY TO BRIDGEPORT MACHINES AND IS MADE AVAILABLE TO YOU FOR THE USE AND MAINTENANCE OF OUR PRODUCTS. ANY USE, REPRODUCTION, OR DISSEMINATION OF THIS INFORMATION FOR ANY OTHER PURPOSE IS PROHIBITED WITHOUT WRITTEN PERMISSION.

TITLE
SCHEMATIC
SPE BOARD

SIZE C	CODE IDENT NO.	DWG NO. 1928565	REV. 0
SCALE : DO NOT SCALE DWG		SHEET 2 OF 2	

DESIGNED: JW	DATE: 9-24-78
DRAWN: F.T. BURNS	DATE: 9-25-78
CHECKED:	DATE:
APPROVED:	DATE: 10-6-78
PROJECT NO. 819	MODEL NO. ATC

DIMENSIONING
UNLESS OTHERWISE SPECIFIED ALL DIMENSIONS ARE IN MILLIMETERS
MM (INCH)
THIRD ANGLE PROJECTION
TOLERANCES
MM DIM. X.0 = ±, X.X = ±
INCH DIM. .XX = ±, .XXX = ±
ANGLES X.X = ± .5°

MATERIAL :
FINISH :
MARKING: PER A027099
TYPE: , CLASS: , POINT
REMOVE BURRS AND SHARP EDGES.
INTERNAL CORNERS .4mm (.016) MAX.

DWG NO.	PARTS LIST
NEXT ASSEMBLY	

1 2 3 4 A B C D

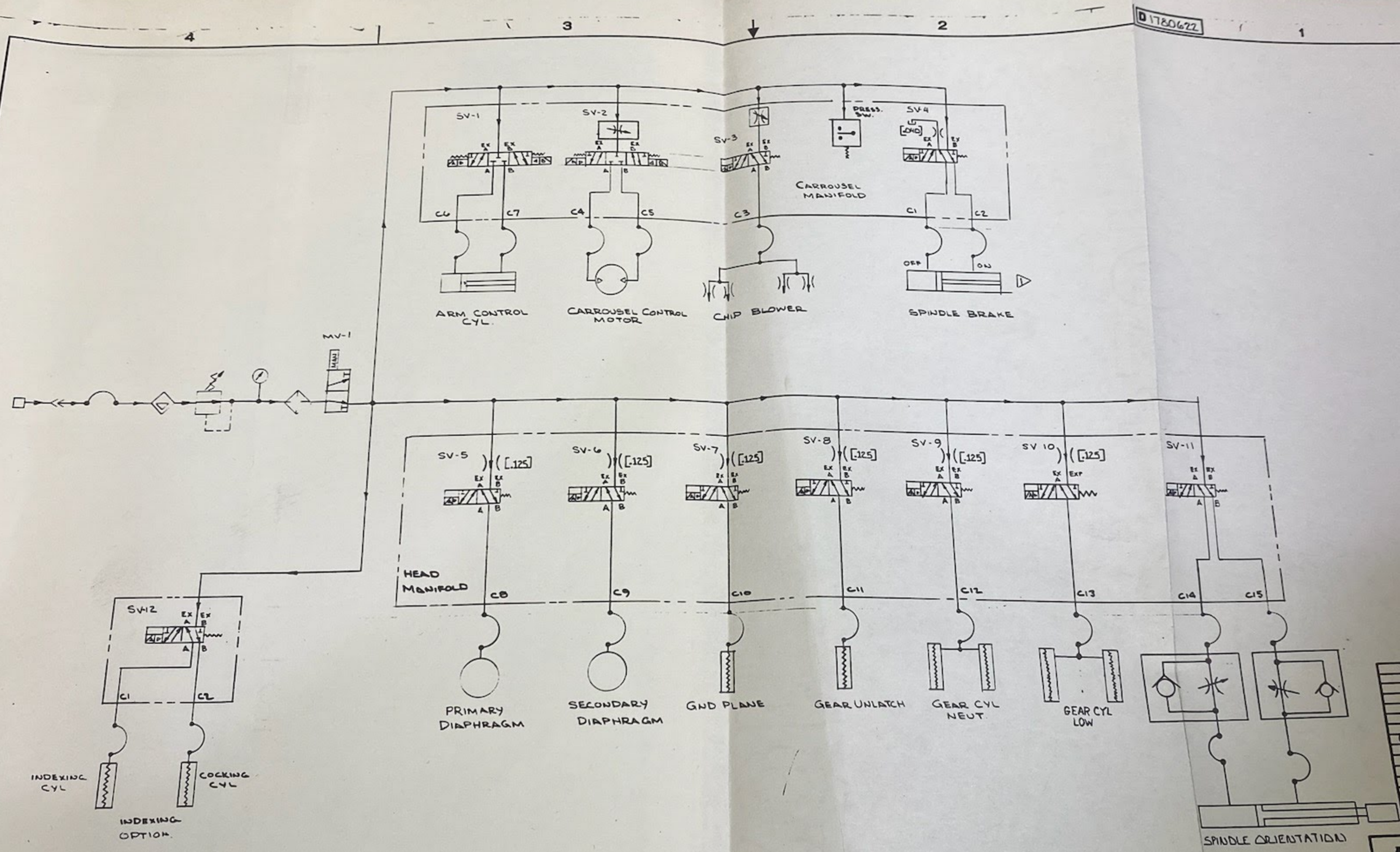

1 PNEUMATIC BRAKE ONE MACHINE ONLY REPLACE WITH INDEX OPTION.

LTR	DCN NO.	CHG'D	APPV'D	DATE
G	DCN 26976 81-15-02	JHS		
F	DCN 26569 80-47-05	JHS		
E	DCN 24881 80-22-05	JHS		
D	DCN 24783 80-19-05	JHS		
B	DCN 23704 80-01-04	JHS		
A	DCN 23555 79-40-05			
0	INITIAL RELEASE			

REVISION

Bridgeport® TEXTRON
Bridgeport Machines Division of Textron Inc.
CONTROLS MANUFACTURING PLANT
200 Precision Road, Horsham, Pa. 19044

THIS DOCUMENT/DRAWING PROVIDES INFORMATION WHICH IS PROPRIETARY TO BRIDGEPORT MACHINES AND IS MADE AVAILABLE TO YOU FOR THE USE AND MAINTENANCE OF OUR PRODUCTS. ANY USE, REPRODUCTION OR DISSEMINATION OF THIS INFORMATION FOR ANY OTHER PURPOSE IS PROHIBITED WITHOUT WRITTEN PERMISSION.

DWG NO.	PARTS LIST
NEXT ASSEMBLY	

MATERIAL:
FINISH:
MARKING: PER A027099
TYPE: , CLASS: , POINT
REMOVE BURRS AND SHARP EDGES. INTERNAL CORNERS .4mm (.016) MAX.

DIMENSIONING
UNLESS OTHERWISE SPECIFIED ALL DIMENSIONS ARE IN MILLIMETERS
MM (INCH)
THIRD ANGLE PROJECTION
TOLERANCES
MM .X = ± ( )
ANGLE .X = ±.5°

DESIGNED: AJN	DATE: 79-41-03	
DRAWN: AJN	DATE: 79-41-04	
CHECKED: AJN	DATE: 79-41-09	
APPROVED:	DATE: 744106	
PROJECT NO. 846	MODEL NO. I-BTC	

TITLE
PNEUMATIC SCHEMATIC

SIZE	CODE IDENT NO.	DWG NO.	REV.
D		1780622	G

SCALE — : — DO NOT SCALE DWG
SHEET 2 OF 2
(WAS 1930823)

SYM	REVISION DESCRIPTION	DATE	APPROVAL
A	DCN 13906	6-30-76	JCF
B	DCN 16503	10-18-76	JCF
C	DCN 24903	80-12-09	[illegible]

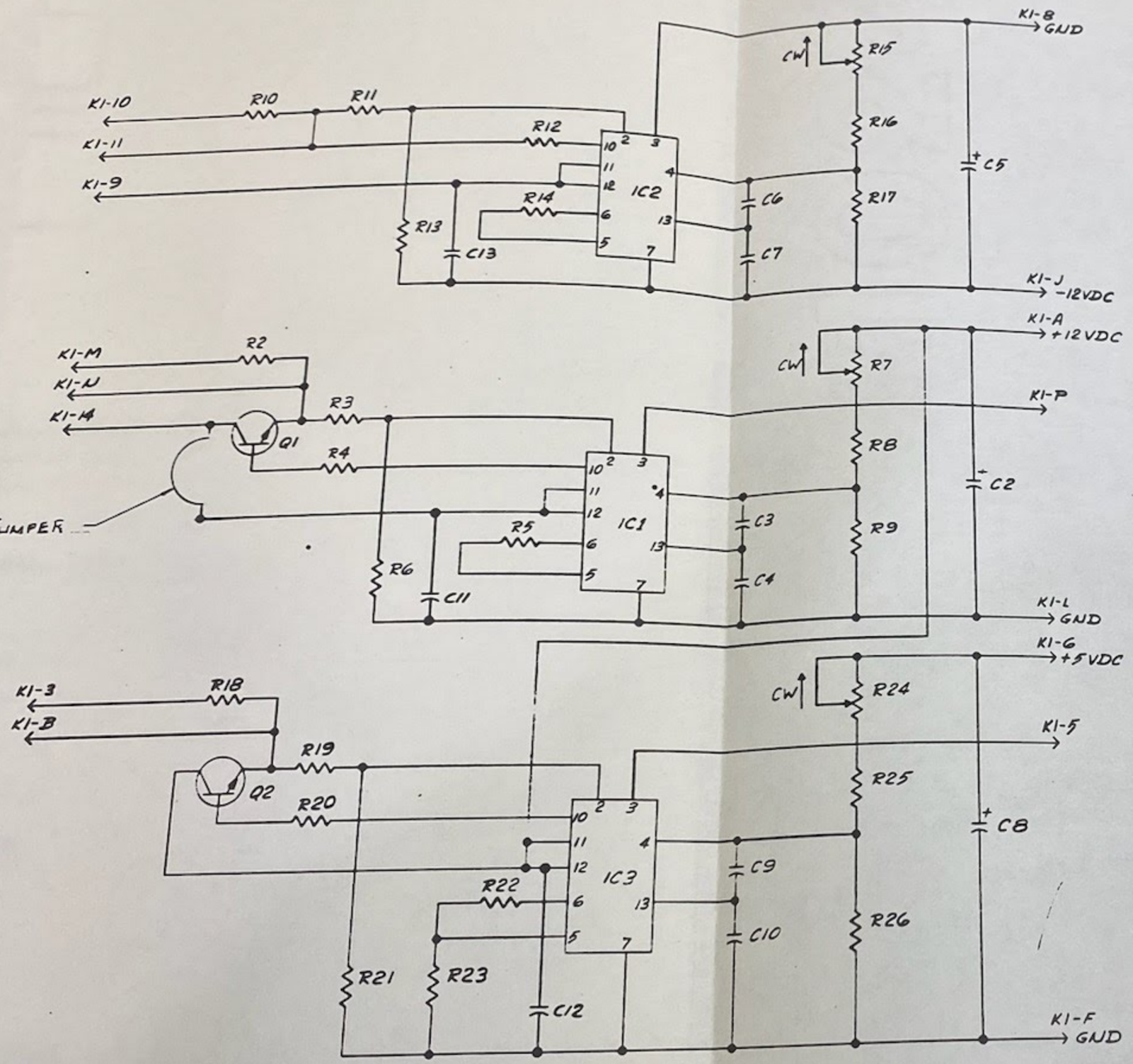

NEXT ASSY	PARTS LIST NO	UNLESS OTHERWISE SPECIFIED: REMOVE BURRS & SHARP EDGES INTERNAL CORNERS .015 R. MAX.	UNLESS OTHERWISE SPECIFIED DIMENSIONS ARE IN INCHES TOLERANCES ON DECIMALS ± ANGLES ± FRACTIONS ±	DATE OF DRAWING 6-10-76	FPS BOARD SCHEMATIC SERIES 1B	BRIDGEPORT CONTROLS DIVISION BRIDGEPORT MACHINES WORSHAM, PENNA.
			MATERIAL:	DRAFTSMAN JCF		
		√ FINISH ALL OVER		CHECKED BY		THIS DRAWING MAY NOT BE COPIED OR REPRODUCED WITHOUT PERMISSION
		APPLY PART NO.	HEAT TREATMENT:	APPROVED BY		D 024086 REV C
APPLICATION		METHOD: CHARACTERS	PROTECTIVE FINISH:	SUBMITTED:	SCALE — UNIT WT.	CODE SHEET 2 OF 2
				APPROVED:		

DO NOT SCALE DRAWING

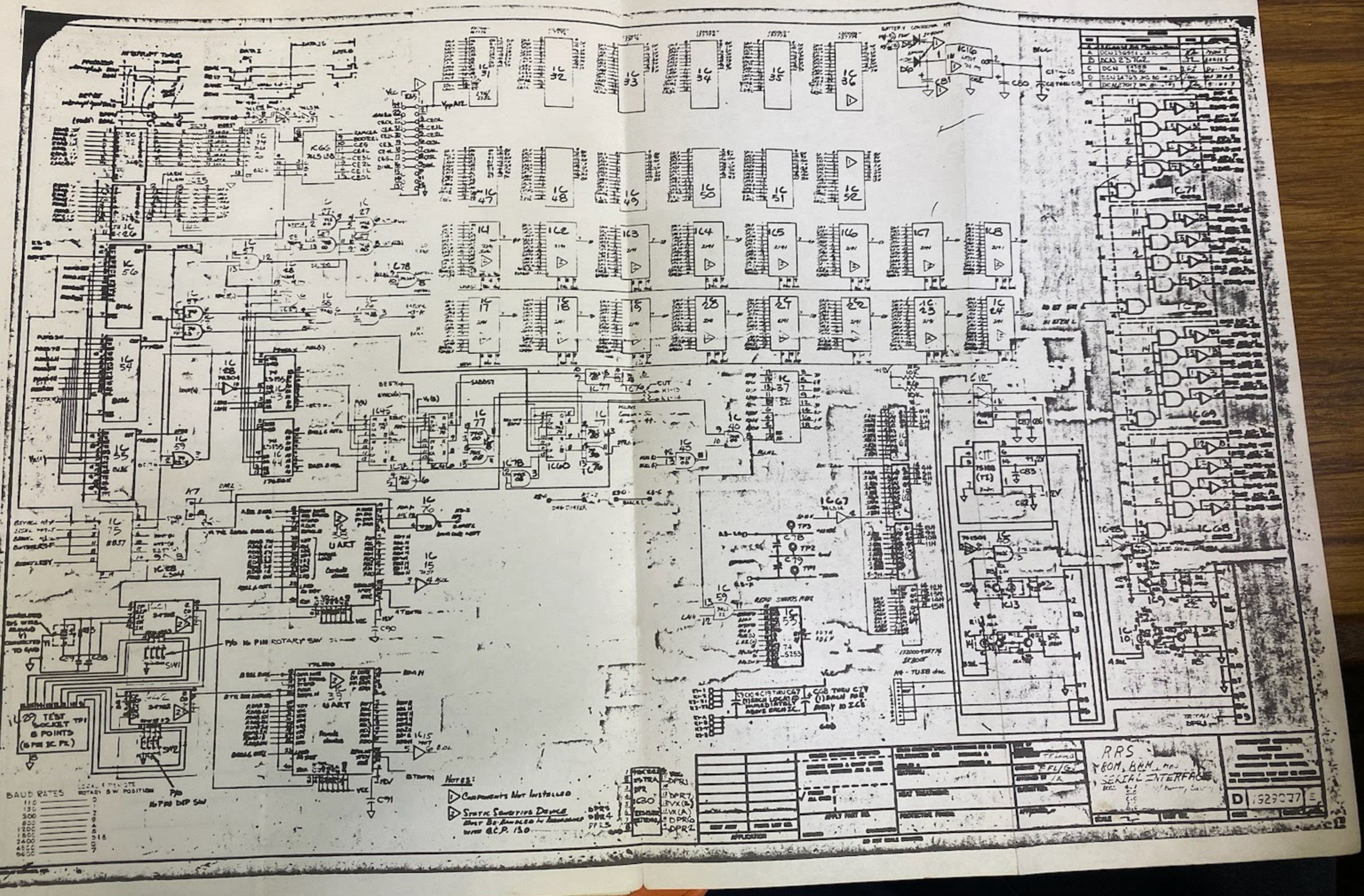
UART
UART
TEST SOCKET TP1 8 POINTS (16 PIN IC PK.)
P/O 16 PIN ROTARY SW
P/O 16 PIN DIP SW
BAUD RATES
Notes:
RRS
ROM, RAM, I/O SERIAL INTERFACE

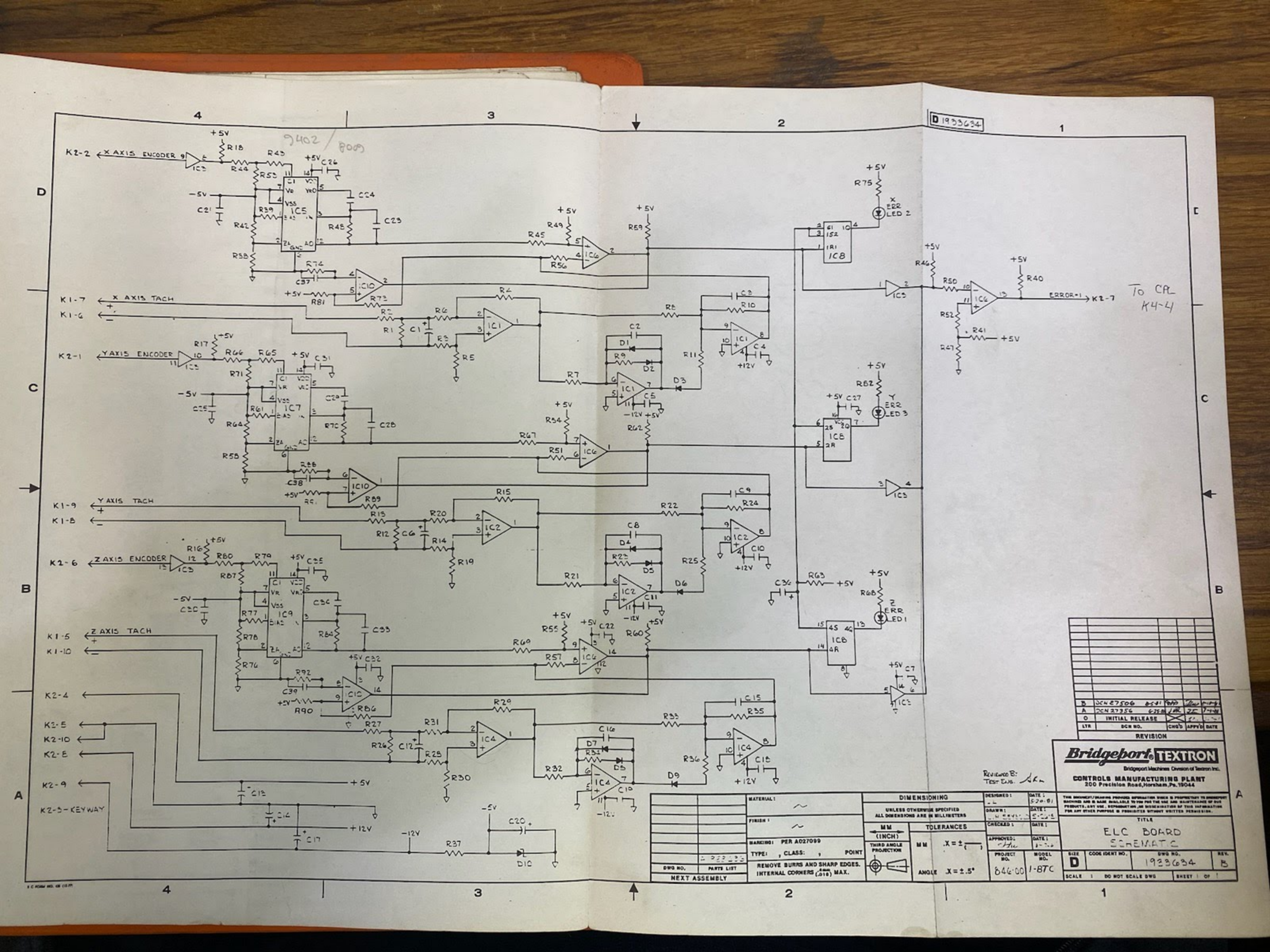

D 1933634
9402 / 8009
K2-2 X AXIS ENCODER
K1-7 X AXIS TACH
K1-6
K2-1 Y AXIS ENCODER
K1-9 Y AXIS TACH
K1-8
K2-6 Z AXIS ENCODER
K1-5 Z AXIS TACH
K1-10
K2-4
K2-5
K2-10
K2-8
K2-9
K2-3-KEYWAY
ERROR-1 K2-7
To CPL K4-4
X ERR LED 2
Y ERR LED 3
Z ERR LED 1
REVISION
B DCN 27506
A DCN 27356
O INITIAL RELEASE
LTR DCN NO. CHG'D APPV'D DATE
Bridgeport TEXTRON
Bridgeport Machines Division of Textron Inc.
CONTROLS MANUFACTURING PLANT
200 Precision Road, Horsham, Pa. 19044
Reviewed By: Test Eng.
MATERIAL: ~
FINISH: ~
MARKING: PER A027099
TYPE: , CLASS: , POINT
REMOVE BURRS AND SHARP EDGES.
INTERNAL CORNERS (.4mm/.016) MAX.
DIMENSIONING
UNLESS OTHERWISE SPECIFIED ALL DIMENSIONS ARE IN MILLIMETERS
MM (INCH)
THIRD ANGLE PROJECTION
TOLERANCES
MM .X = ± ( )
ANGLE .X = ±.5°
DESIGNED: DATE: 5-20-81
DRAWN: DATE: 5-26-81
CHECKED: DATE:
APPROVED: DATE:
PROJECT NO. 846-00
MODEL NO. 1-BTC
TITLE
ELC BOARD SCHEMATIC
SIZE D
CODE IDENT NO.
DWG NO. 1933634
REV. B
SCALE 1 DO NOT SCALE DWG
SHEET 1 OF 1
DWG NO.
PARTS LIST
NEXT ASSEMBLY

SCHEMATIC
XTC BOARD
1

D 1930760

IC 56 NOT USED.
LAST COMPONENT NO. USED C64, D5, IC63, P2, Q18, R88.

SPARES

POWER SECTION COMPLETELY ISOLATED FROM LOGIC SECTION

TYPICAL INPUT SWITCH CIRCUIT (x24)

TYPICAL OUTPUT DRIVER CIRCUIT (x16)

DO NOT SCALE DRAWING

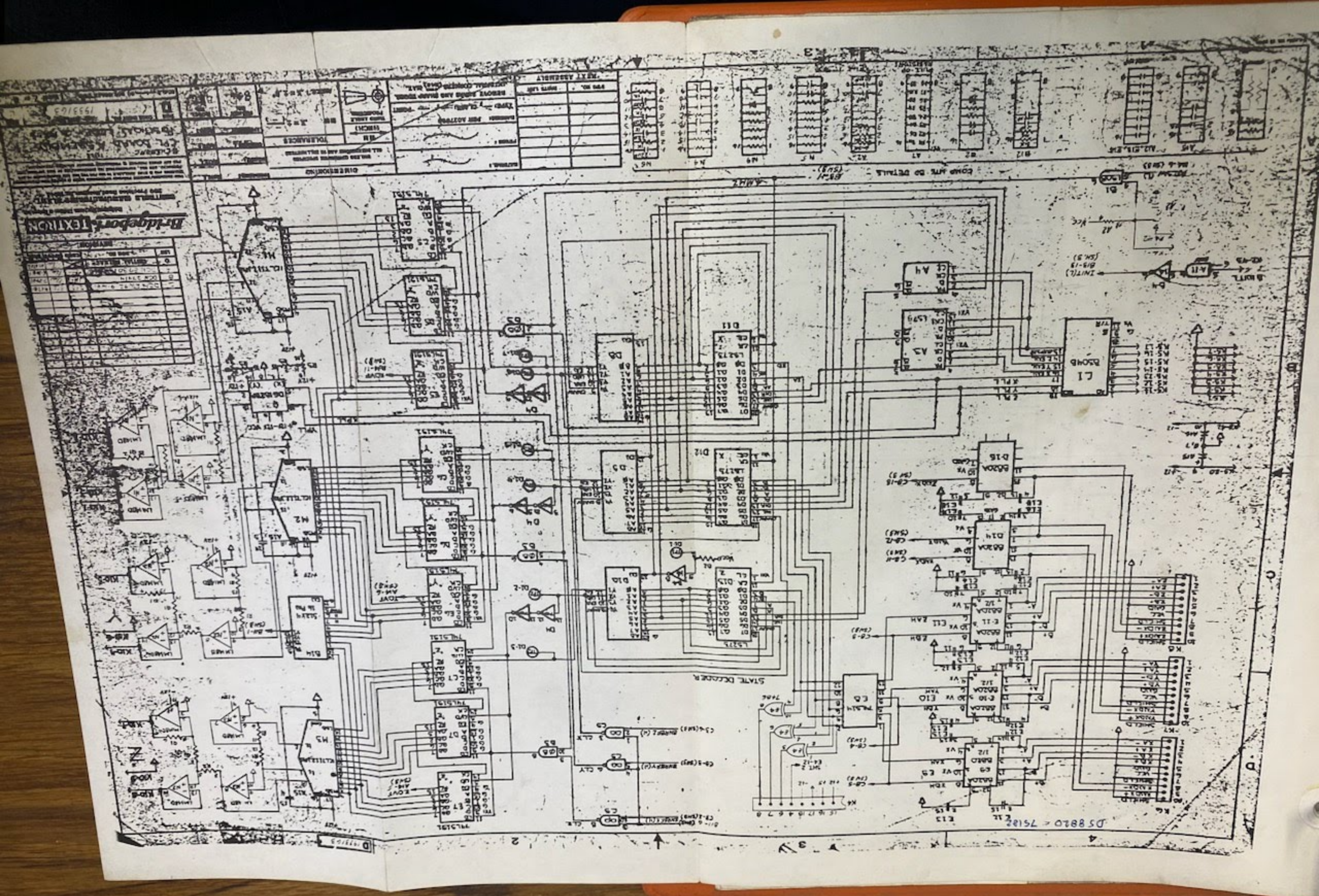
Bridgeport TEXTRON
STATE DECODER
COMP MTR DO DETAILS

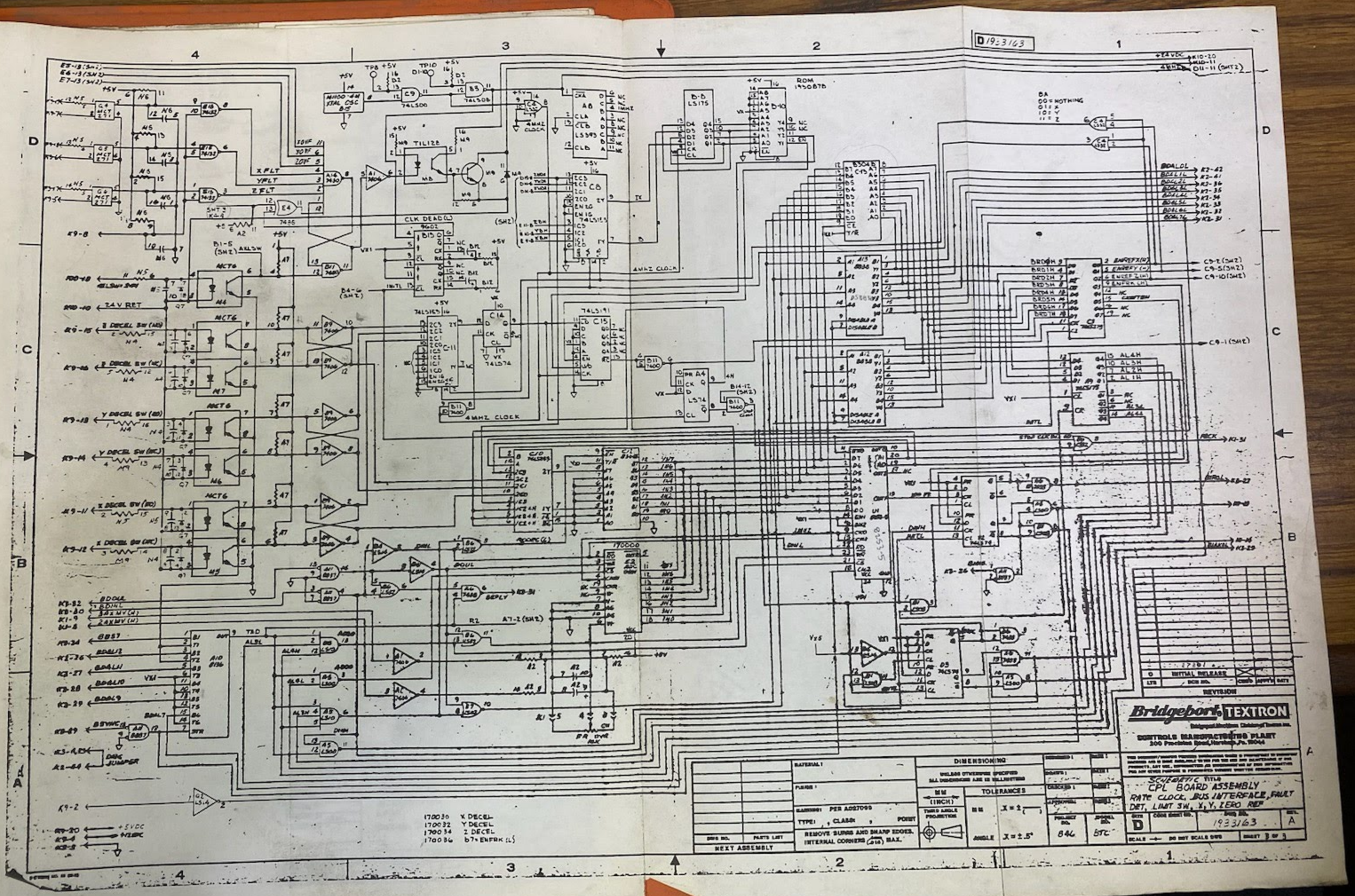
D 1933163
Bridgeport TEXTRON
CONTROLS MANUFACTURING PLANT
200 Precision Road, Horsham, Pa. 19044
SCHEMATIC TITLE
CPL BOARD ASSEMBLY
RATE CLOCK, BUS INTERFACE, FAULT DET, LIMIT SW, X, Y, ZERO REF
D
1933163
A
SCALE — DO NOT SCALE DWG
SHEET 3 OF 3
REVISION
INITIAL RELEASE
DIMENSIONING
TOLERANCES
MM
ANGLE X = ±.5°
846
BTC
NEXT ASSEMBLY
REMOVE BURRS AND SHARP EDGES.
INTERNAL CORNERS (.010) MAX.
170030 X DECEL
170032 Y DECEL
170034 Z DECEL
170036 b7=ENFRK (L)
DAMP JUMPER
24V RET
4MHZ CLOCK
CLK DEAD (L)
ROM 1950878
BA
00 = NOTHING
01 = X
10 = Y
11 = Z

SCHEMATIC
ZDI

D 1930271 K

THIS DRAWING/DESIGN PROVIDES INFORMATION WHICH IS PROPRIETARY TO BRIDGEPORT MACHINES AND IS MADE AVAILABLE TO YOU FOR THE USE AND MAINTENANCE OF OUR PRODUCTS. ANY USE, REPRODUCTION, OR DISSEMINATION OF THIS INFORMATION FOR ANY OTHER PURPOSE IS PROHIBITED WITHOUT WRITTEN PERMISSION.

Note:
1. Component Not Installed

WARNING

HIGH VOLTAGE TERMINALS ARE EXPOSED WHEN EQUIPMENT DOORS ARE OPEN. DO NOT ALLOW UNAUTHORIZED PERSONNEL NEAR THE EQUIPMENT WHILE THE DOORS ARE OPEN AND THE EQUIPMENT IS ELECTRICALLY LIVE.

3. Locate pots P1 and P2 on the XTC board in the Logic card Rack.

4. Adjust P2 for +15 VDC at K9-20. Next check for -15 VDC at K9-6.

5. The speed reference voltage adjustment (P1) is made as follows:

   1. Set the spindle speed to 2000 RPM.

   2. Using a hand held tachometer, adjust P1 until the spindle runs at 2000 RPM.

7.8 Orientation Set-up

1. With power off to the control and no air connected, preset the two orientation regulators to the off state (full counterclockwise).

2. Connect the main air supply to the control and verify a setting of 75 PSI at the line regulator.

3. Adjust the orientation reset regulator (port C15 on the head manifold) for 25 to 30 PSI (hose closest to the head on the shot pin cylinder).

4. Turn power on to the control. Place the system in the SETUP state. Manually turn the spindle until the key faces the column.

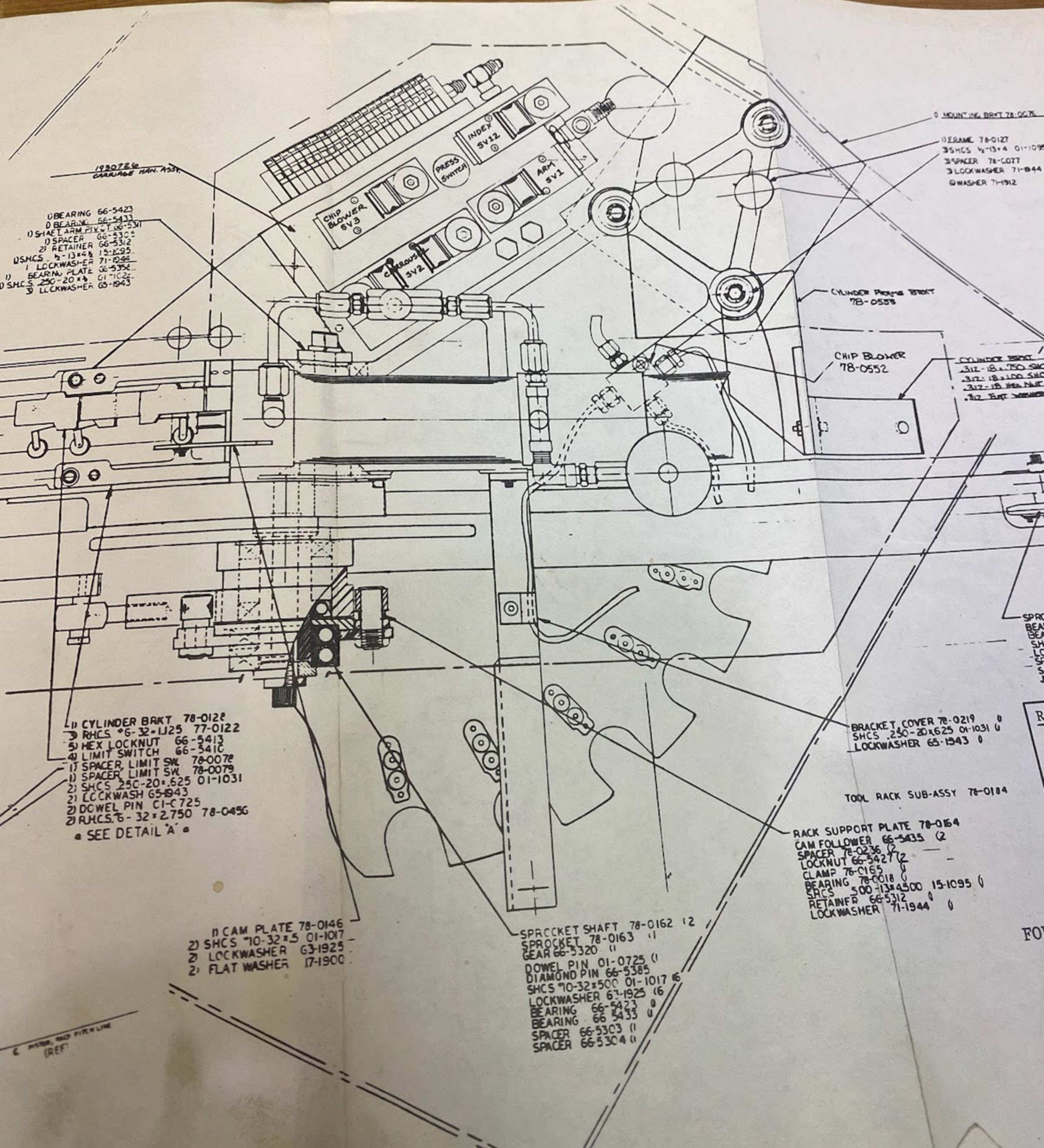
1930726
CARRIAGE ASSY.
1) BEARING 66-5423
1) BEARING 66-5433
1) SHAFT, ARM PIVOT 66-5341
1) SPACER 66-5306
2) RETAINER 66-5312
1) SHCS ½-13×4½ 15-1095
1 LOCKWASHER 71-1944
1) BEARING PLATE 66-5356
1) SHCS .250-20×⅝ 01-1026
3) LOCKWASHER 65-1943
INDEX SV12
PRESS SWITCH
CHIP BLOWER SV3
ARM SV1
CHROUS SV2
1) MOUNTING BRKT 78-0076
1) FRAME 78-0127
3) SHCS ½-13×4 01-1095
3) SPACER 78-0077
3) LOCKWASHER 71-1944
3) WASHER 71-1912
CYLINDER PROBE BRKT 78-0555
CHIP BLOWER 78-0552
1) CYLINDER BRKT 78-0128
3) RHCS #6-32×1.125 77-0122
5) HEX LOCKNUT 66-5413
4) LIMIT SWITCH 66-3410
1) SPACER, LIMIT SW. 78-0078
1) SPACER, LIMIT SW. 78-0079
2) SHCS .250-20×.625 01-1031
2) LOCKWASH 65-1943
2) DOWEL PIN C1-C725
2) RHCS #6-32×2.750 78-0456
SEE DETAIL "A"
1) CAM PLATE 78-0146
2) SHCS #10-32×.5 01-1017
2) LOCKWASHER 63-1925
2) FLAT WASHER 17-1900
SPROCKET SHAFT 78-0162 (2
SPROCKET 78-0163 (1
GEAR 66-5320 (1
DOWEL PIN 01-0725 (1
DIAMOND PIN 66-5385
SHCS #10-32×.500 01-1017 (6
LOCKWASHER 63-1925 (6
BEARING 66-5423 (1
BEARING 66-5433 (1
SPACER 66-5303 (1
SPACER 66-5304 (1
BRACKET COVER 78-0219 (1
SHCS .250-20×.625 01-1031 (1
LOCKWASHER 65-1943 (1
TOOL RACK SUB-ASSY 78-0184
RACK SUPPORT PLATE 78-0164
CAM FOLLOWER 66-5435 (2
SPACER 78-0236 (2
LOCKNUT 66-5427 (2
CLAMP 78-0165 (1
BEARING 78-0018 (1
SHCS .500-13×4.500 15-1095 (1
RETAINER 66-5312 (1
LOCKWASHER 71-1944 (1

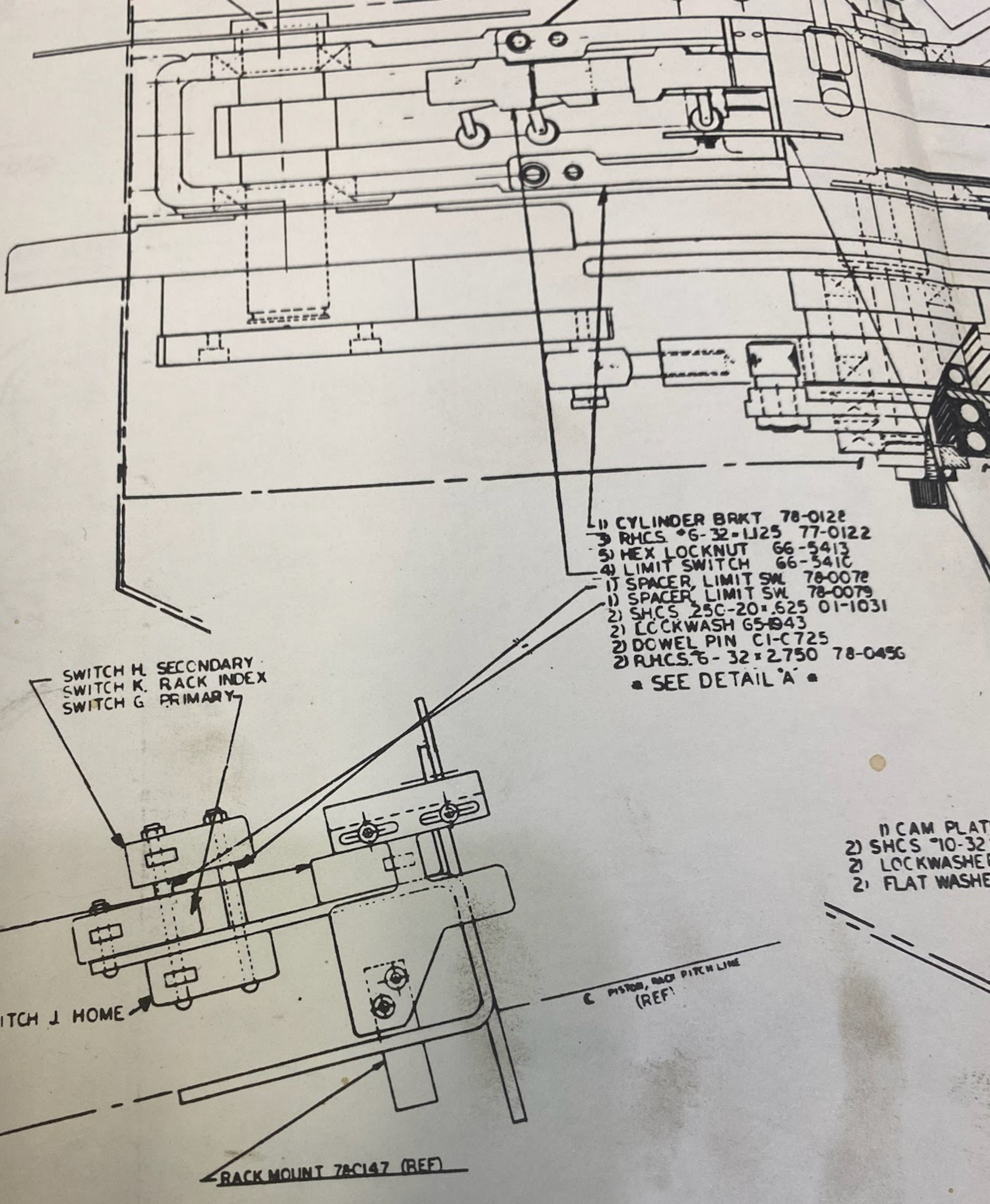
SWITCH H SECONDARY
SWITCH K RACK INDEX
SWITCH G PRIMARY
SWITCH J HOME
RACK MOUNT 78-C147 (REF)
PISTON, RACK PITCH LINE (REF)
1) CYLINDER BRKT 78-0128
3) RHCS #6-32-1.125 77-0122
5) HEX LOCKNUT 66-5413
4) LIMIT SWITCH 66-5410
1) SPACER, LIMIT SWL 78-0078
1) SPACER, LIMIT SWL 78-0079
2) SHCS 250-20×.625 01-1031
2) LOCKWASH G5-1943
2) DOWEL PIN C1-C725
2) RHCS #6-32×2.750 78-0456
SEE DETAIL 'A'
1) CAM PLAT
2) SHCS #10-32
2) LOCKWASHE
2) FLAT WASHE

DETAIL "A"

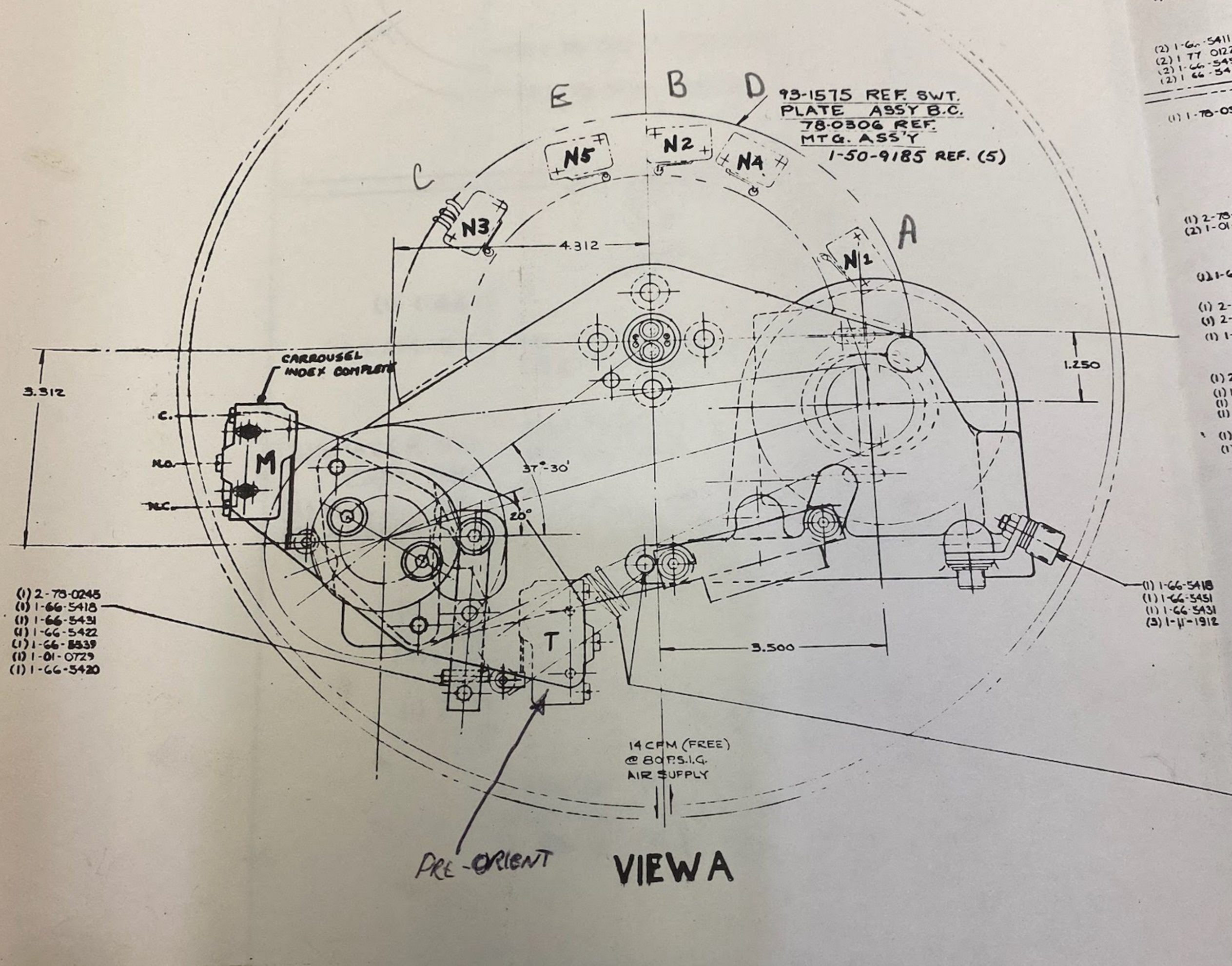

VIEW A

REFERENCE DWGS

1930743 SHEET 6 OF 8
SOLENOID VALVE SCHEMATIC
1930743 SHEET 7 OF 8
SWITCH OPER. SCHEMATIC
1780622 SHEET 1 OF 2
PNEUMATIC ASSEMBLY
1780622 SHEET 2 OF 2
PNEUMATIC SCHEMATIC

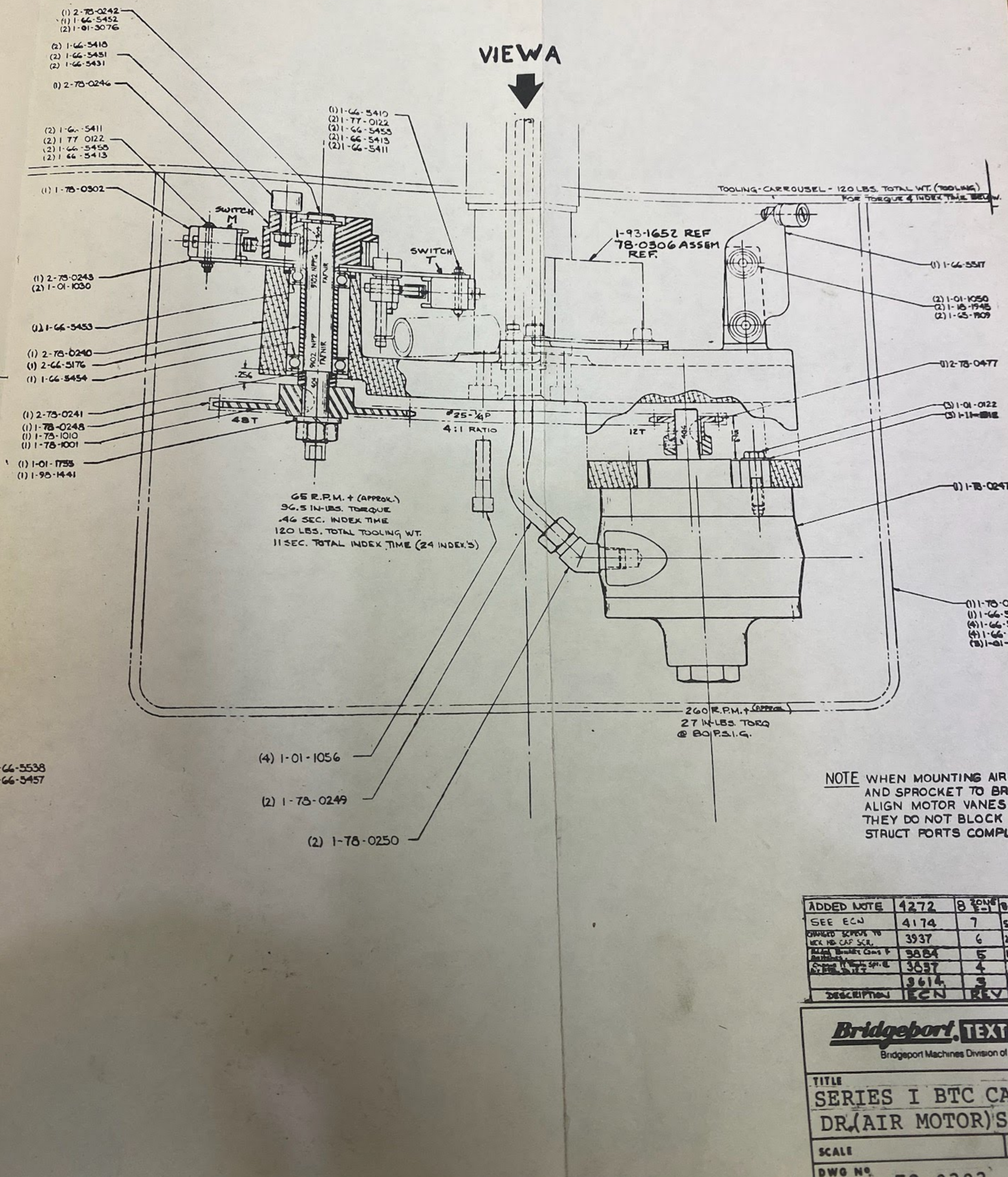

NOTE WHEN MOUNTING AIR MOTOR
AND SPROCKET TO BRACKET
ALIGN MOTOR VANES SO THA
THEY DO NOT BLOCK OR OB
STRUCT PORTS COMPLETEL

DESCRIPTION	ECN	REV	DATE	
ADDED NOTE	4272	8	8-11-80	K
SEE ECN	4174	7	5-9-80	G
CHANGED SCREWS TO MCH HD CAP SCR.	3937	6	2-12-80	
	3884	5	1-22-80	
	3837	4	12-10-79	
	3614	3	9-17-79	

Bridgeport. TEXTRON
Bridgeport Machines Division of Textron In

TITLE
SERIES I BTC CARRO
DR. (AIR MOTOR) SUB-

SCALE | SHEET

DWG NO. 78-0303

CARROUSEL

DETAIL

~~B~~ 11 SEC 1 ROUND

→ SWITCH M INDEX STOP CONTACTS
WIRES # 230 & 260 XTC-K10 PIN #9

→ SWITCH T PRE-ORIGIN
WIRES #230 & 111 XTC K10 PIN #8

ST-8084	78-0363	WAS 78-0311 ADDED ST-8081

HOUSING 78-0342

S H.C.S. .3125-18-1.250 (12)
1-01-1056
WASHER LOCK (12)
1-98-1443
WASHER FLAT (12)
1-42-1984

-1016 (2)
R (2)

TCH F

SNAP RING
1-66-5293 (2)
THRUST WASHER
1-66-5294 (2)

65-2526 CABLE CLAMP
01-1016 SHCS

LATE & DIAPHRAM ASS'Y
78-0324

-1016 (4)
-1925 (4)

COVER TOP ASS'Y
78-0328

EQ'D REF.

SEAT
66-5248 (3)
SPRING
66-5291 (3)

78-0902 SHIM

TOLERANCE UNLESS OTHERWISE NOTED	MATL	PATT. NO.	
2 PLACE DEC = .01	H.T.		
3 PLACE DEC = .005	FINISH		
4 PLACE DEC = .0005	DRN.	DATE 2-5	THIRD ANGLE PROJECTION
ANGLE = 1°	CK'D	DATE	
ALL SHARP EDGES TO BE BROKEN			

Bridgeport TEXTRON
Bridgeport Machines Division of Textron Inc

TITLE MOUNTING SWITCH PLATE POT ASS'Y
SERIES LOW HEAD HIGH POT

SCALE FULL SHEET 01

DWG NO. 1278-0701 REV. 4

3 2 1

A B C D E F